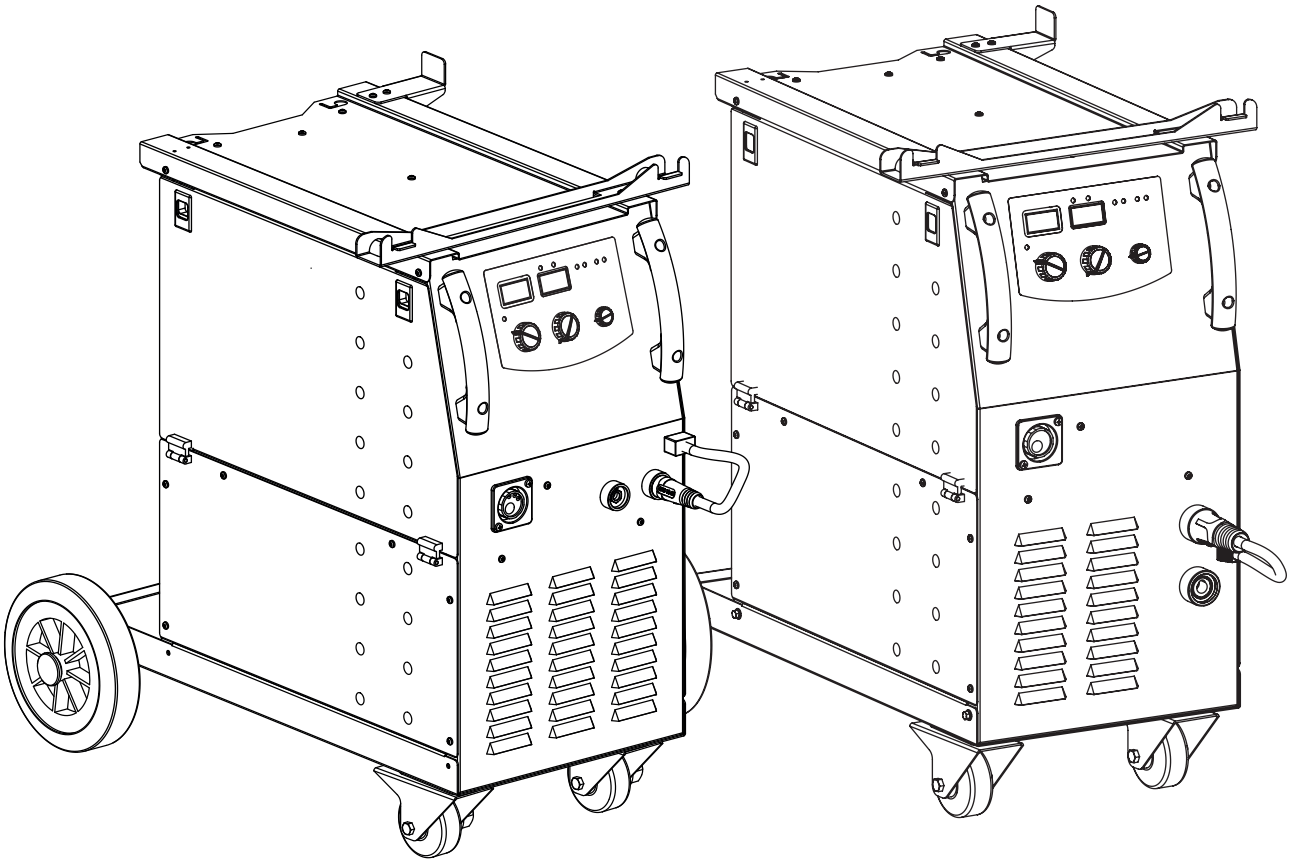

MULTIWELD
250T / 320T / FV 220M / 400T

Poste à souder MIG/MAG et MMA
MIG/MAG and MMA welding machine
MIG/MAG und E-Hand-Schweißgerät
Equipo de soldadura MIG/MAG y MMA
Сварочный аппарат МИГ/МАГ и ММА
MIG/MAG en MMA Lasapparaat
Dispositivo di saldatura MIG/MAG e MMA
Urządzenie do spawania MIG/MAG i MMA

C51365_V14_02/11/2022

www.gys.fr

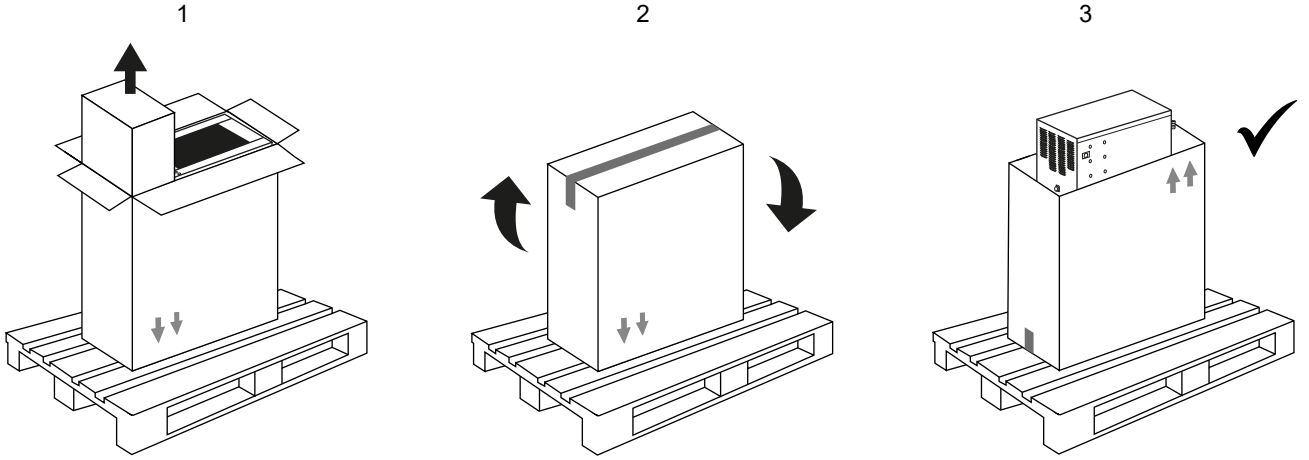
1
2
3

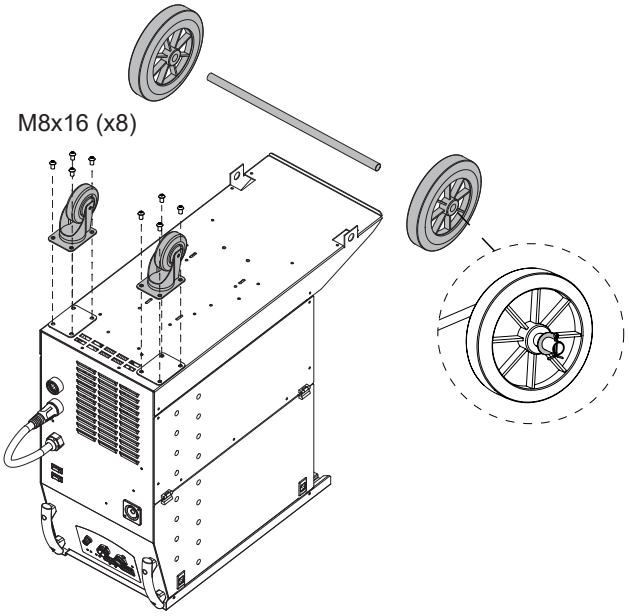
M8x16 (x8)

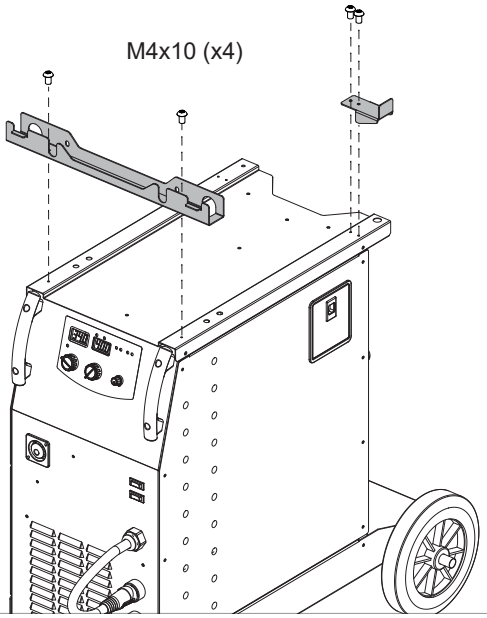
M4x10 (x4)

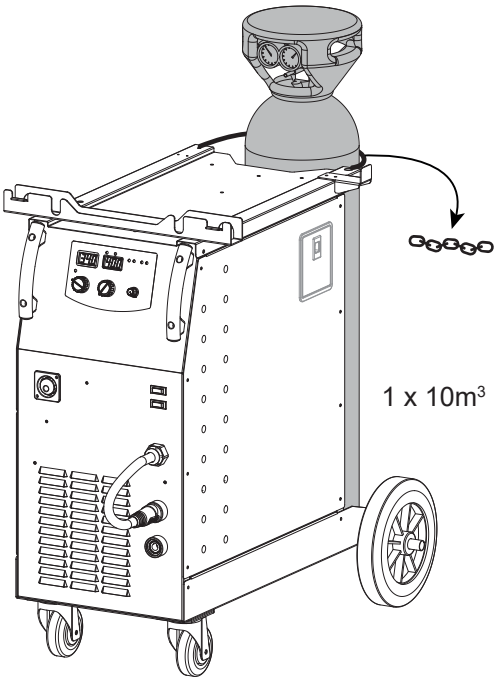
1 x 10m³

⚠ WARNING - SAFETY RULES

GENERAL INSTRUCTIONS

Read and understand the following safety recommendations before using or servicing the unit. Any change or servicing that is not specified in the instruction manual must not be undertaken.

The manufacturer is not liable for any injury or damage due to non-compliance with the instructions featured in this manual.In the event of problems or uncertainty, please consult a qualified person to handle the inspection properly.

ENVIRONMENT

This equipment must only be used for welding operations in accordance with the limits indicated on the descriptive panel and/or in the user manual. The operator must respect the safety precautions that apply to this type of welding. In case of inedaquate or unsafe use, the manufacturer cannot be held liable for damage or injury.

This equipment must be used and stored in a place protected from dust, acid or any other corrosive agent. Operate the machine in an open, or well-ventilated area.

Operating temperature:
Use between -10 and +40°C (+14 and +104°F).
Store between -20 and +55°C (-4 and 131°F).
Air humidity:
Lower or equal to 50% at 40°C (104°F).
Lower or equal to 90% at 20°C (68°F).
Altitude:
Up to 1000 meters above sea level (3280 feet).

PROTECTION OF THE INDIVIDUALS

Arc welding can be dangerous and can cause serious and even fatal injuries.
Welding exposes the user to dangerous heat, arc rays, electromagnetic fields, noise, gas fumes, and electrical shocks. People wearing pacemakers are advised to consult with their doctor before using this device.
To protect oneself as well as the other, ensure the following safety precautions are taken:

In order to protect you from burns and radiations, wear clothing without cuffs. These clothes must be insulated, dry, fireproof and in good condition, and cover the whole body.

Wear protective gloves which guarantee electrical and thermal insulation.

Use sufficient welding protective gear for the whole body: hood, gloves, jacket, trousers... (varies depending on the application/operation). Protect the eyes during cleaning operations. Do not operate whilst wearing contact lenses.
It may be necessary to install fireproof welding curtains to protect the area against arc rays, weld spatters and sparks.
Inform the people around the working area to never look at the arc nor the molten metal, and to wear protective clothes.

Ensure ear protection is worn by the operator if the work exceeds the authorised noise limit (the same applies to any person in the welding area).

Stay away from moving parts (e.g. engine, fan...) with hands, hair, clothes etc...
Never remove the safety covers from the cooling unit when the machine is plugged in - The manufacturer is not responsible for any accident or injury that happens as a result of not following these safety precautions.

The pieces that have just been welded are hot and may cause burns when manipulated. During maintenance work on the torch or the electrode holder, you should make sure it's cold enough and wait at least 10 minutes before any intervention. The cooling unit must be on when using a water cooled torch in order to ensure that the liquid does not cause any burns.
ALWAYS ensure the working area is left as safe and secure as possible to prevent damage or accidents.

WELDING FUMES AND GAS

The fumes, gases and dust produced during welding are hazardous. It is mandatory to ensure adequate ventilation and/or extraction to keep fumes and gases away from the work area. An air fed helmet is recommended in cases of insufficient air supply in the workplace.
Check that the air intake is in compliance with safety standards

Care must be taken when welding in small areas, and the operator will need supervision from a safe distance. Welding certain pieces of metal containing lead, cadmium, zinc, mercury or beryllium can be extremely toxic. The user will also need to degrease the

workpiece before welding.
Gas cylinders must be stored in an open or ventilated area. The cylinders must be in a vertical position secured to a support or trolley.
Do not weld in areas where grease or paint are stored.

FIRE AND EXPLOSIONS RISKS

Protect the entire welding area. Compressed gas containers and other inflammable material must be moved to a minimum safe distance of 11 meters.
A fire extinguisher must be readily available.

Be careful of spatter and sparks, even through cracks. It can be the source of a fire or an explosion.
Keep people, flammable objects and containers under pressure at a safe distance.
Welding of sealed containers or closed pipes should not be undertaken, and if opened, the operator must remove any inflammable or explosive materials (oil, petrol, gas...).
Grinding operations should not be directed towards the device itself, the power supply or any flammable materials.

GAS BOTTLE

Gas leaking from the cylinder can lead to suffocation if present in high concentrations around the work area.
Transport must be done safely: Cylinders closed and product off. Always keep cylinders in an upright position securely chained to a fixed support or trolley.
Close the bottle after any welding operation. Be wary of temperature changes or exposure to sunlight.
Cylinders should be located away from areas where they may be struck or subjected to physical damage.
Always keep gas bottles at a safe distance from arc welding or cutting operations, and any source of heat, sparks or flames.
Be careful when opening the valve on the gas bottle, it is necessary to remove the tip of the valve and make sure the gas meets your welding requirements.

ELECTRIC SAFETY

The machine must be connected to an earthed electrical supply. Use the recommended fuse size.
An electrical discharge can directly or indirectly cause serious or deadly accidents.

Do not touch any live part of the machine (inside or outside) when it is plugged in (Torches, earth cable, cables, electrodes) because they are connected to the welding circuit.
Before opening the device, it is imperative to disconnect it from the mains and wait 2 minutes, so that all the capacitors are discharged.
Do not touch the torch or electrode holder and earth clamp at the same time.
Damaged cables and torches must be changed by a qualified and skilled professional. Make sure that the cable cross section is adequate with the usage (extensions and welding cables). Always wear dry clothes in good condition, in order to be insulated from the electrical circuit. Wear insulating shoes, regardless of the environment in which you work in.

EMC CLASSIFICATION

These Class A devices are not intended to be used on a residential site where the electric current is supplied by the public network, with a low voltage power supply. There may be potential difficulties in ensuring electromagnetic compatibility on these sites, because of the interferences, as well as radio frequencies.

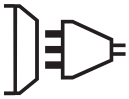

This equipment complies with the IEC 61000-3-11 standard.

This equipment does not comply with IEC 61000-3-12 and is intended to be connected to private low-voltage systems interfacing with the public supply only at the medium- or high-voltage level. On a public low-voltage power grid, it is the responsibility of the installer or user of the device to ensure, by checking with the operator of the distribution network, which device can be connected.

ELECTROMAGNETIC INTERFERENCES

The electric currents flowing through a conductor cause electrical and magnetic fields (EMF). The welding current generates an EMF field around the welding circuit and the welding equipment.

The EMF fields may disrupt some medical implants, such as pacemakers. Protection measures should be taken for people wearing medical implants. For example, access restrictions for passers-by or an individual risk evaluation for the welders.

All welders should take the following precautions in order to minimise exposure to the electromagnetic fields (EMF) generated by the welding circuit::

• position the welding cables together – if possible, attach them;
• keep your head and torso as far as possible from the welding circuit;
• never enroll the cables around your body;
• never position your body between the welding cables. Hold both welding cables on the same side of your body;
• connect the earth clamp as close as possible to the area being welded;
• do not work too close to, do not lean and do not sit on the welding machine
• do not weld when you're carrying the welding machine or its wire feeder.

People wearing pacemakers are advised to consult their doctor before using this device.
Exposure to electromagnetic fields while welding may have other health effects which are not yet known.

RECOMMANDATIONS TO ASSES THE AREA AND WELDING INSTALLATION

Overview

The user is responsible for installing and using the arc welding equipment in accordance with the manufacturer's instructions. If electromagnetic disturbances are detected, it is the responsibility of the user of the arc welding equipment to resolve the situation with the manufacturer's technical assistance. In some cases, this remedial action may be as simple as earthing the welding circuit. In other cases, it may be necessary to construct an electromagnetic shield around the welding power source and around the entire piece by fitting input filters. In all cases, electromagnetic interferences must be reduced until they are no longer bothersome.

Welding area assessment

Before installing the machine, the user must evaluate the possible electromagnetic problems that may arise in the area where the installation is planned.

In particular, it should consider the following:

a) the presence of other power cables (power supply cables, telephone cables, command cable, etc...)above, below and on the sides of the arc welding machine.

b) television transmitters and receivers ;

c) computers and other hardware;

d) critical safety equipment such as industrial machine protections;

e) the health and safety of the people in the area such as people with pacemakers or hearing aids;

f) calibration and measuring equipment

g) the isolation of the equipment from other machinery.

The user will have to make sure that the devices and equipments that are in the same room are compatible with each other. This may require extra precautions;

h) make sure of the exact hour when the welding and/or other operations will take place.

The surface of the area to be considered around the device depends on the the building's structure and other activities that take place there. The area taken in consideration can be larger than the limits determined by the companies.

Welding area assessment

Besides the welding area, the assessment of the arc welding systems intallation itself can be used to identify and resolve cases of disturbances. The assessment of emissions must include in situ measurements as specified in Article 10 of CISPR 11. In situ measurements can also be used to confirm the effectiveness of mitigation measures.

RECOMMENDATION ON METHODS OF ELECTROMAGNETIC EMISSIONS REDUCTION

a. National power grid : The arc welding machine must be connected to the national power grid in accordance with the manufacturer's recommendation. If interferences occur, it may be necessary to take additional preventive measures such as the filtering of the power suplly network. Consideration should be given to shielding the power supply cable in a metal conduit. It is necessary to ensure the shielding's electrical continuity along the cable's entire length. The shielding should be connected to the welding current's source to ensure good electrical contact between the conduct and the casing of the welding current source.

b. Maintenance of the arc welding equipment : The arc welding machine should be be submitted to a routine maintenance check according to the manufacturer's recommendations. All accesses, service doors and covers should be closed and properly locked when the arc welding equipment is on. The arc welding equipment must not be modified in any way, except for the changes and settings outlined in the manufacturer's instructions. The spark gap of the arc start and arc stabilization devices must be adjusted and maintained according to the manufacturer's recommendations.

c. Welding cables : Cables must be as short as possible, close to each other and close to the ground, if not on the ground.

d. Electrical bonding : consideration shoud be given to bonding all metal objects in the surrounding area. However, metal objects connected to the workpiece increase the risk of electric shock if the operator touches both these metal elements and the electrode. It is necessary to insulate the operator from such metal objects.

e. Earthing of the welded part : When the part is not earthed - due to electrical safety reasons or because of its size and its location (which is the case with ship hulls or metallic building structures), the earthing of the part can, in some cases but not systematically, reduce emissions It is preferable to avoid the earthing of parts that could increase the risk of injury to the users or damage other electrical equipment. If necessary, it is appropriate that the earthing of the part is done directly, but in some countries that do not allow such a direct connection, it is appropriate that the connection is made with a capacitor selected according to national regulations.

f. Protection and plating : The selective protection and plating of other cables and devices in the area can reduce perturbation issues. The protection of the entire welding area can be considered for specific situations.

TRANSPORT AND TRANSIT OF THE WELDING MACHINE

Do not use the cables or torch to move the machine. The welding equipment must be moved in an upright position.
Do not place/carry the unit over people or objects.
Never lift the machine while there is a gas cylinder on the support shelf. A clear path is available when moving the item.
The removal of the wire reel from the machine is recommended before undertaking any lifting operation.

EQUIPMENT INSTALLATION

• Put the machine on the floor (maximum incline of 10°.)
• Ensure the work area has sufficient ventillation for welding, and that there is easy access to the control panel.
• The machine must not be used in an area with conductive metal dusts.
• The machine must be placed in a sheltered area away from rain or direct sunlight.
• The MULTIWELD 250T/320T/400T protection level is IP21, which means :
- Protection against acess to dangerous parts from solid bodies of a ≥12.5mm diameter and,
- Protection against vertically falling drops.
• The MULTIWELD FV 220M protection level is IP23, which means :
- Protection against acess to dangerous parts from solid bodies of a ≥12.5mm diameter and,
- Protection against the rain inclined at 60° towards the vertical.
These devices can be used outside in accordance with the IP23 protection index.

The power cables, extensions and welding cables must be fully uncoiled to prevent overheating.

The manufacturer does not incur any responsability regarding damages to both objects and persons that result from an incorrect and/or dangerous use of the machine.

Stray welding currents/voltages may destroy earth conductors, damage electrical equipment or cause components to warm up which may cause a fire.

- All welding connections must be firmly secured, check regularly !
- Check that the metal piece fixation is strong and without any electrical problems !
- Attach or hang all the electrically conductive elements,such as the trolley in order to insulate them.
- Do not place any electrical equipment such as drills on top of the welding machine without insulating them !
- Always place welding torches or electrodes holders on an insulated surface when they’re not in use !

MAINTENANCE / RECOMMENDATIONS

• Maintenance should only be carried out by a qualified person. Annual maintenance is recommended.
• Ensure the machine is unplugged from the mains, and wait for two minutes before carrying out maintenance work. DANGER High Voltage and Currents inside the machine.
• Remove the casing 2 or 3 times a year to remove any excess dust. Take this opportunity to have the electrical connections checked by a qualified person, with an insulated tool.
• Regularly check the condition of the power supply cable. If the power cable is damaged, it must be replaced by the manufacturer, its after sales service or an equally qualified person.
• Ensure the ventilation holes of the device are not blocked to allow adequate air circulation.
• Do not use this equipment to thaw pipes, to charge batteries, or to start any engine.

INSTALLATION – PRODUCT OPERATION

Only qualified personnel authorized by the manufacturer should perform the installation of the cutting equipment. During set up, the operator must ensure that the machine is unplugged. Connecting generators in a series or a parallel circuit is forbidden.
It is recommended to use the welding cables supplied with the unit in order to obtain the optimum product settings.

DESCRIPTION

Thank you for chosing this machine. To get the best use from your machine, please read the following carefully :
The MULTIWELD range are semi-automatic MIG/MAG, MMA and flux cored wire welding stations. They are manual settings machine, with the help of the table printed on the product. They are recommended for welding steel, stainless steel and aluminium.

POWER SUPPLY

• The MULTIWELD 250T/320T is fitted with a 16A socket type EN 60309-1 which must be connected to a three-phase 400V (50 - 60 Hz) power supply fitted with four wires and one earthed neutral.

• The MULTIWELD 400T is fitted with a 32A socket type EN 60309-1 which must be connected to a three-phase 400V (50 - 60 Hz) power supply fitted with four wires and one earthed neutral.
• The MULTIWELD FV 220M is supplied with a 16 A CEE7/7 plug and may only be used in a single-phase 230 V (50 - 60 Hz) three-wire electrical installation with a grounded neutral conductor.
This product, equipped with a «Flexible Voltage» system, can be used on an earthed electrical installation between 110V and 230V (50 - 60Hz).
The absorbed effective current (I1eff) is displayed on the machine, for optimal use. Check that the power supply and its protection (fuse and/or circuit breaker) are compatible with the current needed by the machine. In some countries, it may be necessary to change the plug to allow the use at maximum settings.
• The MULTIWELD FV 220M is equipped with the Protect 400 function (P400): the device switches to protection (protection light flashes) if the supply voltage is higher than 265V. Normal operation resumes as soon as the supply voltage returns to its nominal range.

USE WITH EXTENSION CABLES

All extension cables must have an adequate size and section, relative to the machine's voltage.
Use an extension that complies with national safety regulations.

	Input Voltage	Section of extension cable
MULTIWELD **400T**	400 V - 3~	4 mm²
MULTIWELD **250T/320T**		2.5 mm²
MULTIWELD **FV 220M**	230 V - 1~	
	110 V - 1~	

DEVICE PRESENTATION (FIG. I)

1- Reel support
2- Back cable support
3- Digital displays
4- Adjustement of welding settings
5- European standard torch connection
6- Polarity reversal cable
7- Earth clamp connector
8- Torch support
9- Gas connector
10- On/off switch
11- Power supply cable
12- Bottle support (max 1 x 10m³ bottle)
13- Plug 36V DC for gas preheater
14- Storage area (220M)
Accessory box (400T)
15- Wire feed / gas purge switch
16- Post-Gas switch

CONTROL BOARD MMI (FIG. VI)

1- Overheat/Overcurrent indicator (250T/320T/400T)
Overheat/Overcurrent indicator/P400 (FV 220M)
2- Voltage display
3- Current and wire speed display
4- Current indicator
5- Wire speed indicator
6- MMA function indicator
7- MIG function indicator
8- 2T/4T function switch button
9- MIG/MMA switch button
10- Welding arc dynamic adjustment
11- Wire speed adjustment (MIG) / current setting adjustment (MMA)
12- Voltage setting adjustment

SWITCHING ON

The ON/OFF switch is located at the back of the machine. Turn the switch on the «I» position to start the generator. This switch must not be turned off (to «O») while welding.

SEMI-AUTOMATIC FOR STEEL/STAINLESS STEEL (MAG MODE)

Set the voltage output and the wire speed according to the thickness of the weld piece, following the instructions/ recommendations printed on the front of the machine (fig. VII).
The MULTIWELD 250T/320T can weld Steel wire 0.6/1.2 mm, and Stainless Steel of 0.8/1.2 mm.
The MULTIWELD 400T can weld steel and stainless steel wire from Ø 0.6 to 1.6 mm.
The MULTIWELD FV 220M can weld Steel wire 0.6/1.0 mm, and Stainless Steel of 0.8/1.0 mm.

MULTIWELD 250T/320T/FV 220M: The products are fitted to work with 0.8 mm steel wire (roller Ø 0.8/1.0).
MULTIWELD 400T: The product is fitted to work with 1.0 mm steel wire (roller Ø 1.0/1.2).

The contact tube, the groove of the roller and the sleeve of the torch are all compatible with 0.8 mm wire. Should you wish to weld 0.6 wire, use a torch of maximum 3 m long. The contact tip must be changed (fig. II-A) as well as the wire feeder's roller that must be replaced with a 0.6 diameter groove. In this case, the position in such a way to observe 0.6.

For use with Steel, the gas recommendation is argon + CO2. (Ar+CO2). The proportion of CO2 required will vary depending on the use. For Stainless Steel, use the combination of 2% CO2. If welding using pure CO2 protection gas, you should connect a gas preheater on the gas bottle. You may also use a standard 36 V preheater module that can be connected to the 36V power supply plug located nearby the soldering wire reel behind the lateral door (fig. I-13). Note that this 36V DC power supply is also compatible with 36 V AC preheaters. For other specific gas requirements, please contact your gas distributor. The gas flow in steel is between 8 and 12 liters / minute depending on the environment.

SEMI-AUTOMATIC WELDING FOR ALUMINIUM (MIG MODE)

Set the voltage output and the wire speed according to the thickness of the weld piece, following the instructions/ recommendations printed on the front of the machine (fig. VII).
The MULTIWELD 250T/320T/FV 220M can be equipped to weld with aluminium wire Ø 0.8 and 1.0 mm (fig. II-B).
The MULTIWELD 400T can be equipped to weld with aluminium wire Ø 0.8 and 1.6 mm (fig. II-B).

For use with aluminium, the gas requirement is pure argon (Ar). For the specific gas requirements please contact your distributor. The gas flow in Aluminium is between 15 and 25 Litres/minute depending on the environment, and the experience of the welder. Below are the differences between welding with Steel and Aluminium :
- Specific rollers are needed for welding with Aluminium.
- Adjust the pressure of the drive rolls to prevent the wire being crushed.
- Only use a capilliary tube for welding with Steel or Stainless Steel.
- Use a special Aluminium Torch with a teflon sheath to reduce friction.
DO NOT cut the sheath close to the joint, it is used to guide the wire from the the rollers.
- Contact Tube : Use a special aluminium contact tube specific to the diameter of wire being used.

GASLESS WIRE WELDING

Set the voltage output and the wire speed according to the thickness of the weld piece, following the instructions/ recommendations printed on the front of the machine (fig VII).
The MULTIWELD 250T/320T/400T/FV 220M can weld gasless wire to 0.9 to 1.2 mm, if the polarity is reversed (fig. III) respecting a maximum pressure of 5Nm. For parameters of use, please refer to the instructions indicated on page 84. Welding gasless wire with a standard nozzle can lead to overheating and deterioration of the torch. Use a nozzle special «No Gas» (ref. 072329) or remove the original nozzle (Fig III).

MIG / MAG SETTINGS PANEL

CONNECTION AND RECOMMENDATIONS
• Connect the earth clamp on the positive (+) or negative (-) terminal depending on the wire type *(in general on the -)*.

MODE SELECTION AND SETTINGS

Press the left button to select MIG/MAG welding and press the right button to choose the trigger modes : 2T or 4T *(trigger modes only available on MIG Mode)*.

1. Setting the welding voltage :

Adjust the welding voltage using the voltage setting knob depending on the work to be carried out. The voltage setpoint is indicated on the left side display.

2. Setting the wire speed :

Adjust the wire speed using the central knob depending on the work to be carried out. The speed setpoint is indicated on the central side display.

3. Inductance settings :

Adjust the inductance level using the inductance setting knob , a relative value from MIN to MAX. The lower the inductance level, the harder and more guiding the arc. The higher the inductance and the softer the arc with little splatter.

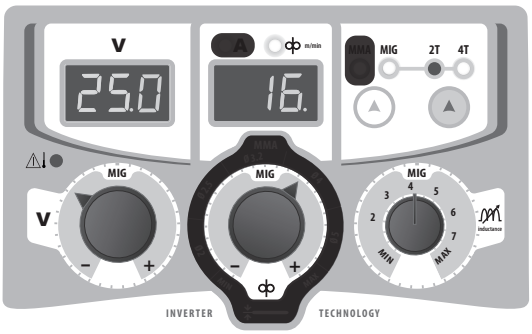

The black areas are not useful for this mode.

4. Post-Gas (MULTIWELD 400)
Duration of the gas protection after the arc is extinguished. It protects the workpiece from oxidation.

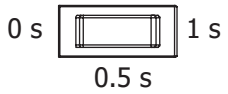

Set the voltage output and the wire speed according to the thickness of the weld piece, following the instructions/ recommendations printed on the front of the machine (fig VII).

REEL AND TORCH ASSEMBLY (FIG. IV)

This product takes Ø 200/300 mm wire reel (ecological).
• Remove the contact tube and its support (fig. D), and the nozzle (fig. E) from the torch.

Fig A :
• Open the door of the machine.
• Place the reel on the drive pin (3) of the reel support.
• Adjust the reel brake (4) to avoid reel movement tangling the wire when the welding stops. Be careful not to tighten too much - the reel must rotate without straining the motor.

Fig B :
MULTIWELD 250T/320T/FV 220 M : The rollers supplied are double groove steel rollers (0.8 and 1.0).
MULTIWELD 400T : The rollers supplied are double groove steel rollers (1.0 and 1.2).
- Use V-grooved rollers for steel and other hard wires.
- Use U-grooved rollers for aluminium and other soft, alloyed wires.

Fig C :
To select the adjustment of the drive rollers.
• Loosen the drive roller knob (3) as far as possible and insert the wire, tighten the knob again slightly.
• Start the motor by pressing the trigger of the torch.
• Tighten the knob whilst pressing the trigger until the wire starts to move.

ATTENTION: When welding with Aluminium, use the minimum possible pressure to avoid crushing the wire.
• Leave about 5cm of wire out of the torch, then put the contact tube (fig. D), and the nozzle (fig. E) adapted to the wire to be used at the extremity.

GAS CONNECTION

- Connect the manometer (flowmeter) to the gas bottle if needed, then connect the gas hose to the gas connector. To avoid gas leak, use collars supplied in the accessories box.
- Make sure the gas bottle hold in place respecting chain fastening cf. fig. V.
- Set the gas flow by adjusting the dial located on the pressure regulator.
NB : to help facilitate the adjustment of the gas flow, operate the drive rollers by pressing the trigger of the torch (ensure that the drive roller is completely loose so the wire is not fed through). Maximum gas pressure 0.5 MPa (5 bars). This procedure does not apply to «Gasless» welding mode.

RISK OF INJURY DUE TO MOVING PARTS

The wire feeders contain moving parts that may catch hand, hair, clothes or tools which can lead to injuries! Take extra care.
• Do not lay a hand to swivel or moving components or parts to the drive!
• Ensure that the housing covers or protective covers remain closed during operation!
• Do not wear gloves when feeding the wire through or changing reel.

MMA SETTINGS PANEL

CONNECTIONS AND RECOMMENDATIONS
• Connect the cables, electrode holder and earth clamp in the connectors,
• Respect the welding polarities and intensities indicated on the electrodes boxes,
• Remove the electrode from the electrode holder when the machine is not in use.

MODE SELECTION AND SETTING

Press the left button ▲ to select MMA welding.

Setting the welding current :

Adjust the welding current using the central knob depending on the work to be carried out. The current setpoint is indicated on the central side display.

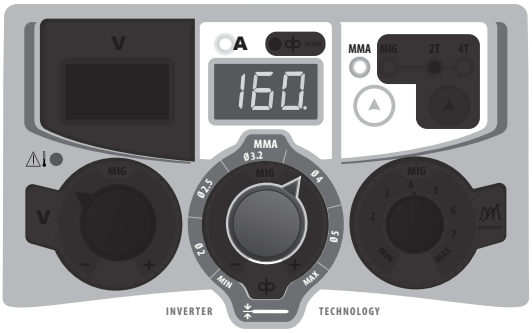

The black areas are not useful for this mode.

WELDING CURRENT SETTINGS

The following settings concern the current range that may be used depending on the electrode's type and diameter. These ranges are quite large as they depend on the application and the welding position.

	Ø electrode *(mm)*	Rutile E6013 *(A)*	Basic E7018 *(A)*
250T / 320T / 400T	1.6	30-60	30-55
	2.0	50-70	50-80
	2.5	60-100	80-110
	3.2	80-150	90-140
	4.0	100-200	125-210
	5	150-290	200-260
	6.3	200-385	220-340

	Ø electrode *(mm)*	Rutile E6013 *(A)*	Basic E7018 *(A)*
FV 220M	1.6	30-60	30-55
	2.0	50-70	50-80
	2.5	60-100	80-110
	3.2	80-150	90-140
	4.0	100-200	125-210
	5	150-220	200-220

ELECTRODE WELDING

• The reverse polarity cable must be disconnected in MMA (stick welding) mode in order to connect the electrode holder and earth clamp. Connect the electrode holder and earth clamp as indicated on the electrode packaging.
• Respect the basic rules of welding.
• This device has 1 feature specific to Inverter machines :
- Anti-Sticking: Enables easy removal of the electrode from the metal. The anti-sticking feature, after its start, requires approximately a 3 seconds delay before resuming normal welding operations.

PROTECTION AND RECOMMENDATIONS

1 - Overheating:
This unit is equipped with a ventilation system regulated by the temperature of the device. When the unit switches to thermal protection, it no longer delivers any current. The orange LED (fig. VI-1) lights up until the temperature of the unit has returned to normal.
• Ensure the ventilation holes of the unit are not blocked to allow adequate air circulation.
• Leave the unit switched on after welding and during thermal protection to allow cooling.
2 - Overcurrent:
This unit is equipped with a primary current measurement. In case of overcurrent, the orange LED (fig. VI-1) lights up. In this case the unit must be switched off and restarted.
3 - P400 (FV 220M only) **:**
This unit is equipped with primary overvoltage protection. In this case, the orange LED (fig. VI-1) will flash once per second.

4 - Observations:
• Respect the basic rules of welding.
• Ensure that there is sufficient ventilation.
• Do not work on a damp surface. To prevent gas leaks, use the clamps supplied in the accessory box.
- Make sure that the gas cylinder is held in place with the fixing collar, see fig. V.
- Set the gas flow rate by adjusting the control dial on the pressure regulator.

TROUBLESHOOTING

SYMPTOMS	POSSIBLE CAUSES	REMEDIES
The protection LED lights up	Exceeding the duty cycle Ambient temperature above 40°C Blocked air inlets	Wait for the indicator to turn off before resuming welding operations. Observe the operating factor and ensure good ventilation
The protection LED flashes (MULTIWELD FV 220M only)	Mains voltage outside maximum tolerance	Have your electrical installation checked by a qualified person.
The welding wire speed is not constant.	Debris is blocking up the opening.	Clean out the contact batch or change it and replace the anti-adherence product.
	The wire skids in the rollers.	• Control the roller pressure or replace it. • Wire diameter non-compatible with roller. • Covering wire guide in the torch non-compatible.

The wire-feeder motor doesn't operate.	Reel or roller brake too tight.	Release the brake and rollers.
	Electrical supply problem.	Check that the power switch is in the «On» position.
Bad wire feeding.	Covering wire guide dirty or damaged.	Clean or replace
	The drive roller is too loose	Tighten the drive roller knob
	Reel brake too tight	Release the brake
No welding current	Bad connection to the main supply	Check the mains connection and look if the plug is fed by power socket.
	Bad earth connection.	Check the earth cable (connection and clamp condition).
	Torch trigger inoperative.	Check the torch trigger / replace torch
The wire jams (after the rollers)	Guide wire sheath crushed.	Check the sheath and torch body.
	Wire jammed in the torch	Clean or replace.
	No capillary tube.	Check the presence of capillary tube.
	Wire speed too fast	Reduce the wire speed
The welding bead is porous	The gas flow rate is not sufficient.	Adjust flow range 15 to 20 L / min.
		Clean the working metal.
	Gas bottle empty.	Replace it.
	Gas quality unsatisfactory.	Replace it.
	Air flow or wind influence.	Prevent drafts, protect welding area.
	Gas nozzle dirty.	Clean or replace the gas nozzle.
	Poor quality wire.	Use suitable WIRE for MIG-MAG welding.
	Surface to weld in bad condtion. (rust, etc…)	Clean the metal before welding.
Very important flashing particules.	Arc voltage too low or too high.	See welding settings.
	Bad earth connection.	Adjust the earth cable for a better connection.
	Insufficient gas flow.	Adjust the gas flow.
No gas flow at the end of the torch.	Bad gas connection.	Check the gas connection at the welding machine. Check the gas regulator and the solenoid valves.

CONDITIONS DE GARANTIE FRANCE

La garantie couvre tous défauts ou vices de fabrication pendant 2 ans, à compter de la date d'achat (pièces et main d'oeuvre).

La garantie ne couvre pas :
• Toutes autres avaries dues au transport.
• L'usure normale des pièces (Ex. : câbles, pinces, etc.).
• Les incidents dus à un mauvais usage (erreur d'alimentation, chute, démontage).
• Les pannes liées à l'environnement (pollution, rouille, poussière).

En cas de panne, retourner le matériel à votre distributeur, en y joignant :
- un justificatif d'achat daté (ticket de sortie de caisse, facture….)
- une note explicative de la panne.

WARRANTY

The warranty covers faulty workmanship for 2 years from the date of purchase (parts and labour).

The warranty does not cover:
• Transit damage.
• Normal wear of parts (eg. : cables, clamps, etc..).
• Damages due to misuse (power supply error, dropping of equipment, disassembling).
• Environment related failures (pollution, rust, dust).

In case of failure, return the unit to your distributor together with:
- The proof of purchase (receipt etc ...)
- A description of the fault reported.

GARANTIE

Die Garantieleistung des Herstellers erfolgt ausschließlich bei Fabrikations- oder Materialfehlern, die binnen 24 Monate nach Kauf angezeigt werden (Nachweis Kaufbeleg).

Die Garantieleistung erfolgt nicht bei:
• Durch Transport verursachten Beschädigungen.
• Normalem Verschleiß der Teile (z.B. : Kabel, Klemmen, usw.) sowie Gebrauchsspuren.
• Von unsachgemäßem Gebrauch verursachten Defekten (Sturz, harte Stöße, Demontage).
• Durch Umwelteinflüsse entstandene Defekte (Verschmutzung, Rost, Staub).

Die Reparatur erfolgt erst nach Erhalt einer schriftlichen Akzeptanz (Unterschrift) des zuvor vorgelegten Kostenvoranschlages durch den Besteller. Im Fall einer Garantieleistung trägt GYS ausschließlich die Kosten für den Rückversand an den Fachhändler.

GARANTÍA

La garantía cubre todos los defectos o vicios de fabricación durante 2 años, a partir de la fecha de compra (piezas y mano de obra)
La garantía no cubre:
• Todas las otras averías resultando del transporte
• El desgaste normal de las piezas (cables, pinzas…)
• Los incidentes resultando de un mal uso (error de alimentación, caída, desmontaje)
• Los fallos relacionados con el entorno (polución, oxidación, polvo…)
En caso de fallo, regresen la maquina a su distribuidor, adjuntando:
• Un justificativo de compra con fecha (recibo, factura…)
• Una nota explicativa del fallo

ГАРАНТИЯ

Гарантия распространяется на любой заводской дефект или брак в течение 2х лет с даты покупки изделия (запчасти и рабочая сила).

Гарантия не распространяется на:
• Любые поломки, вызванные транспортировкой.
• Нормальный износ деталей (Например : кабели, зажимы и т.д.).
• Случаи неправильного использования (ошибка питания, падение, разборка).
• Случаи выхода из строя из-за окружающей среды (загрязнение воздуха, коррозия, пыль).

При выходе из строя, обратитесь в пункт покупки аппарата с предъявлением следующих документов:
- документ, подтверждающий покупку (с датой): кассовый чек, инвойс....
- описание поломки.

GARANTIE

De garantie dekt alle gebreken en fabricagefouten gedurende twee jaar vanaf de aankoopdatum (onderdelen en arbeidsloon).

De garantie dekt niet :
• Alle overige schade als gevolg van vervoer.
• De gebruikelijke slijtage van onderdelen (Bijvoorbeeld : kabels, klemmen, enz.).
• Incidenten als gevolg van verkeerd gebruik (verkeerde elektrische voeding, vallen, ontmanteling).
• Gebreken ten gevolge van de gebruiksomgeving (vervuiling, roest, stof).

In geval van storing moet het apparaat teruggestuurd worden naar uw distributeur, samen met:
- Een gedateerd aankoopbewijs (betaalbewijs, factuur ...).
- Een beschrijving van de storing.

GARANZIA

La garanzia copre qualsiasi difetto di fabbricazione per 2 anni, a partire dalla data d'acquisto (pezzi e mano d'opera).

La garanzia non copre:
• Danni dovuti al trasporto.
• La normale usura dei pezzi (Es. : cavi, morsetti, ecc.).
• Gli incidenti causati da uso improprio (errore di alimentazione, cadute, smontaggio).
• I guasti legati all'ambiente (inquinamento, ruggine, polvere).

In caso di guasto, rinviare il dispositivo al distributore, allegando:
- la prova d'acquisto con data (scontrino, fattura...)
- una nota esplicativa del guasto.

WARUNKI GWARANCJI FRANCJA

Gwarancja obejmuje wszystkie usterki lub wady produkcyjne przez okres 2 lat od daty zakupu (części i robocizna).

Gwarancja nie obejmuje:
• Wszelkich innych szkód spowodowanych transportem.
• Zwykłego zużycia części (Np. : kable, zaciski, itp.).
• Przypadków nieodpowiedniego użycia (błędów zasilania, upadków czy demontażu).
• Uszkodzenia związane ze środowiskiem (zanieczyszczenia, rdza, kurz).

W przypadku usterki należy zwrócić urządzenie do dystrybutora, załączając:
- dowód zakupu z datą (paragon fiskalny, fakturę....)
- notatkę z wyjaśnieniem usterki.

I

250T / 320T :

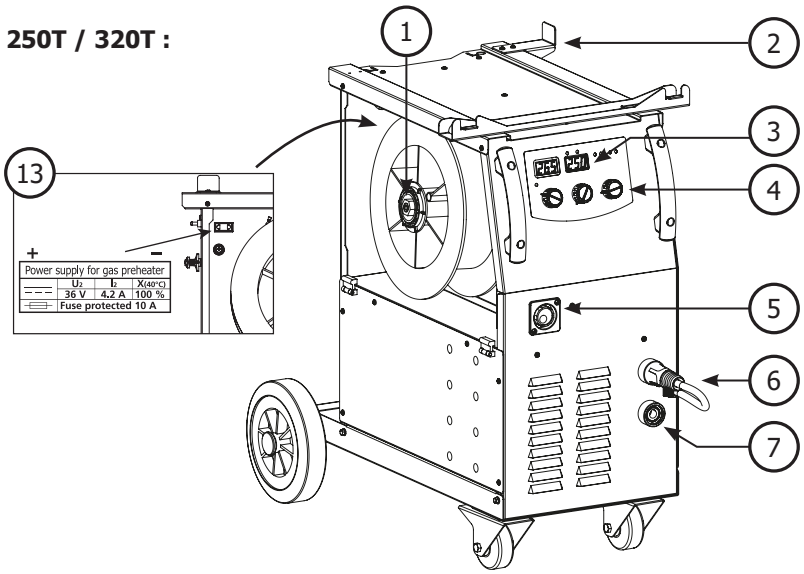

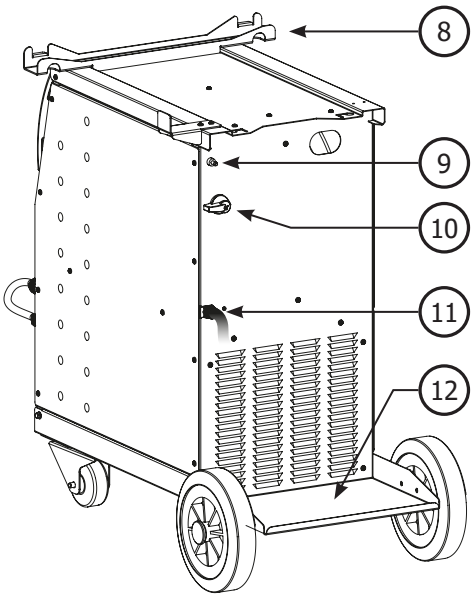

FV 220M :

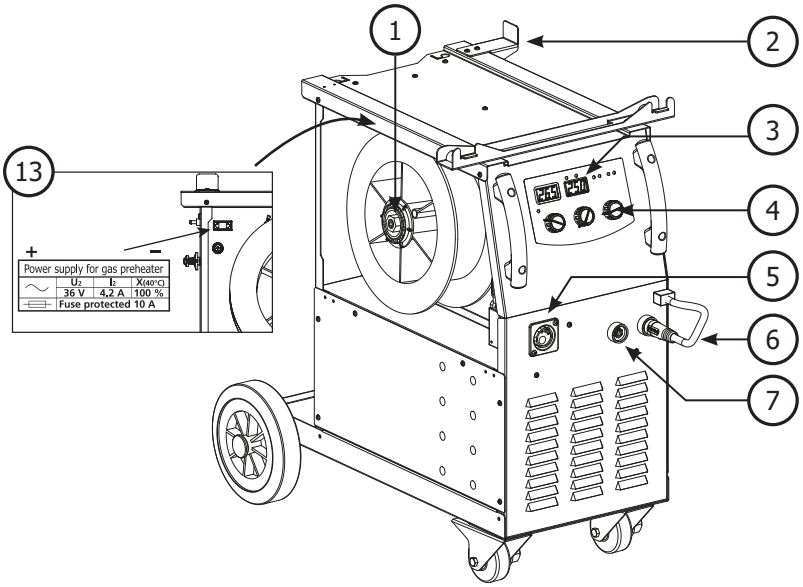

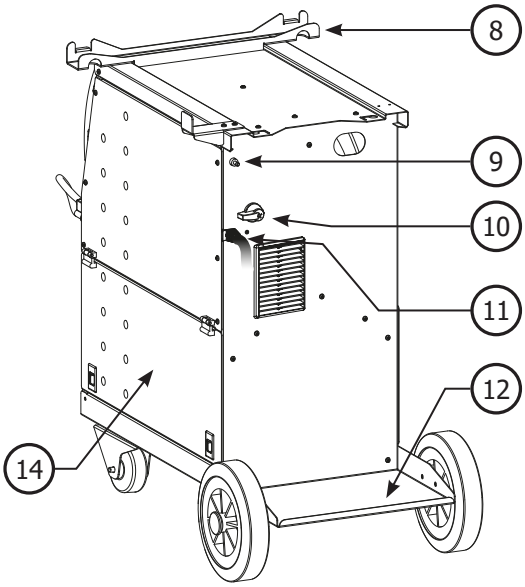

400T :

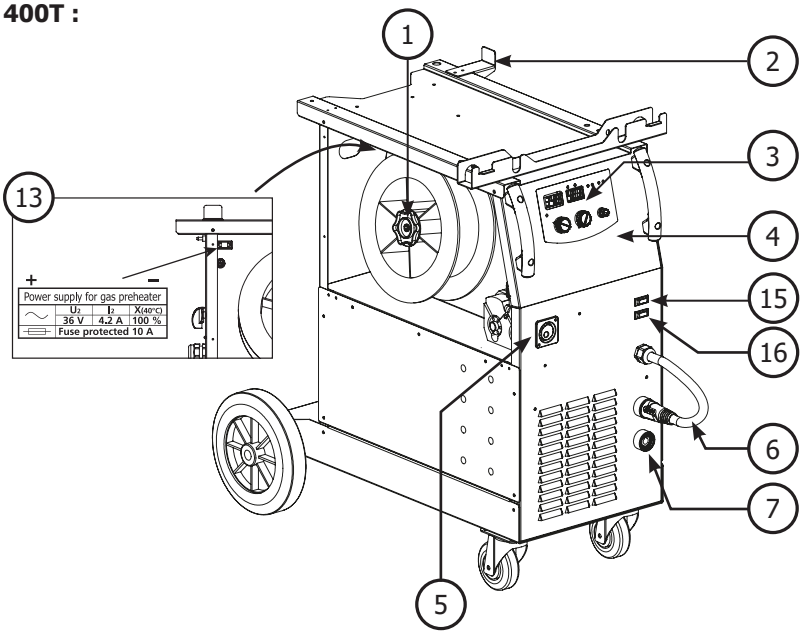

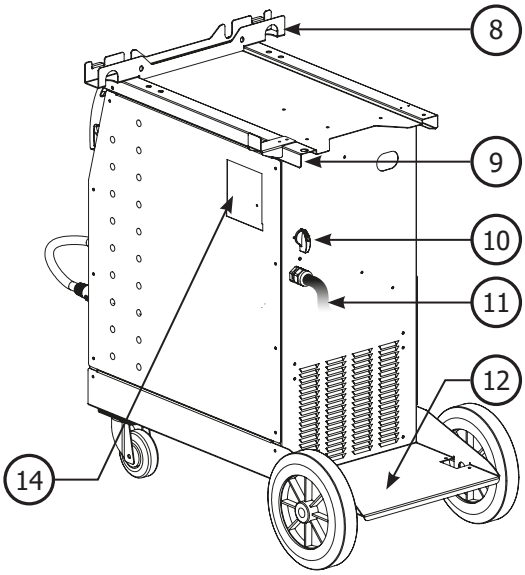

II

A	Acier - Steel - Stahl - Acero - Staal - Aço	B	Alu

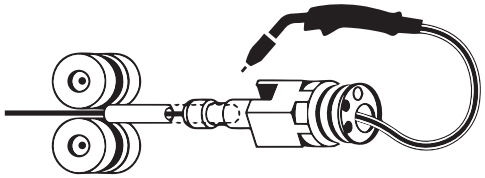

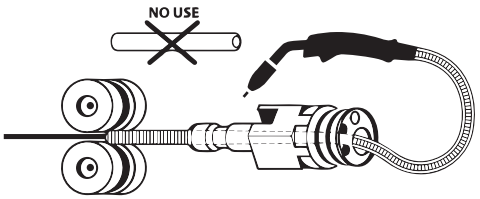

MIG-MAG

250T / 320T :

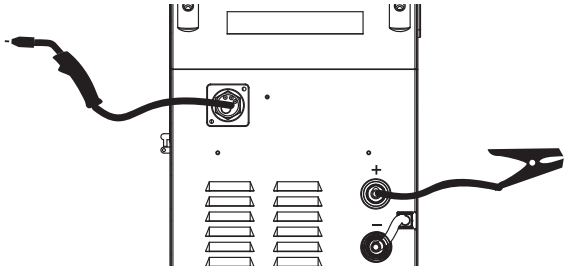

NO GAS

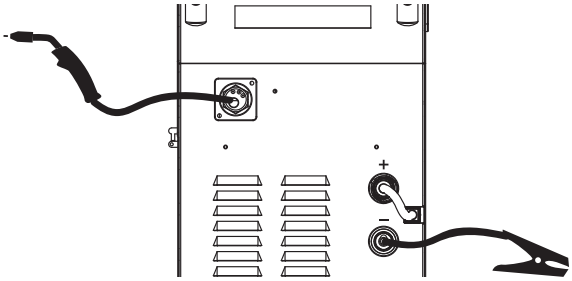

GAS

FV 220M :

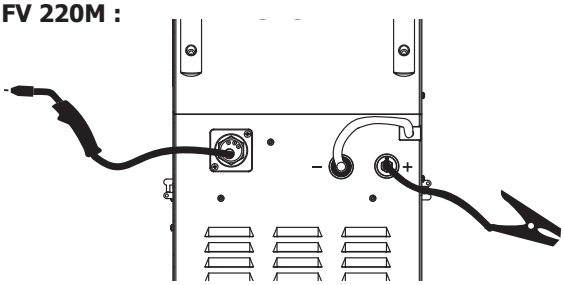

NO GAS

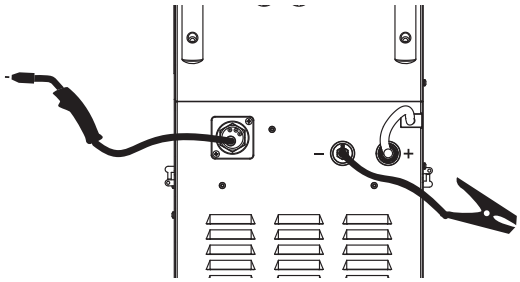

GAS

400T :

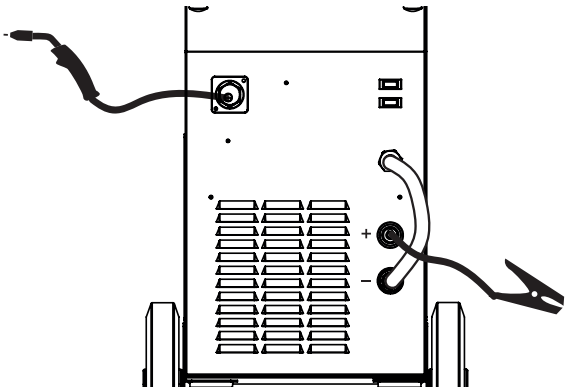

NO GAS

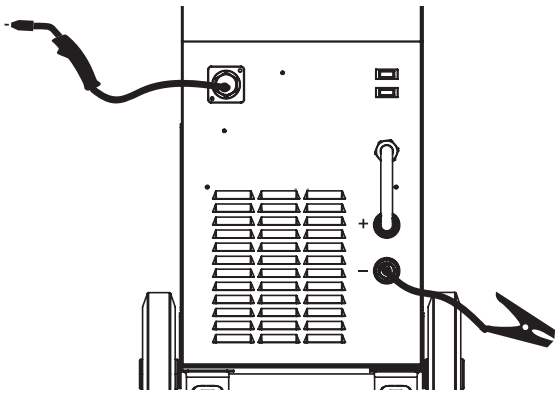

GAS

MMA

250T / 320T :

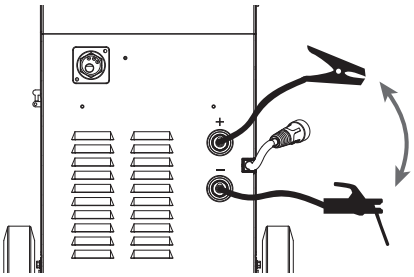

FV 220M :

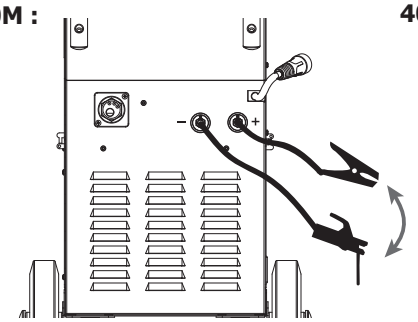

400T :

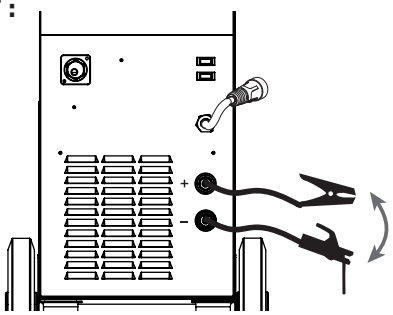

FR - Vérifier la polarité de l'électrode sur l'emballage.

EN - Check the electrode polarity on the packaging.

DE - Beachten Sie die auf der Elektrodenverpackung beschriebenen Angaben zur Polarität.

ES - Compruebe la polaridad del electrodo sobre el embalaje.

RU - Проверить полярность электрода на упаковке.

NL - Controleer de polariteit van de elektrode aangegeven op de verpakking.

IT - Verificare la polarità dell'elettrodo sulla confezione.

PL - Sprawdzić polaryzację elektrody na opakowaniu.

III

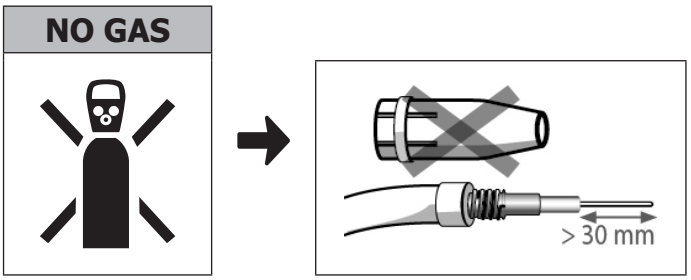

IV

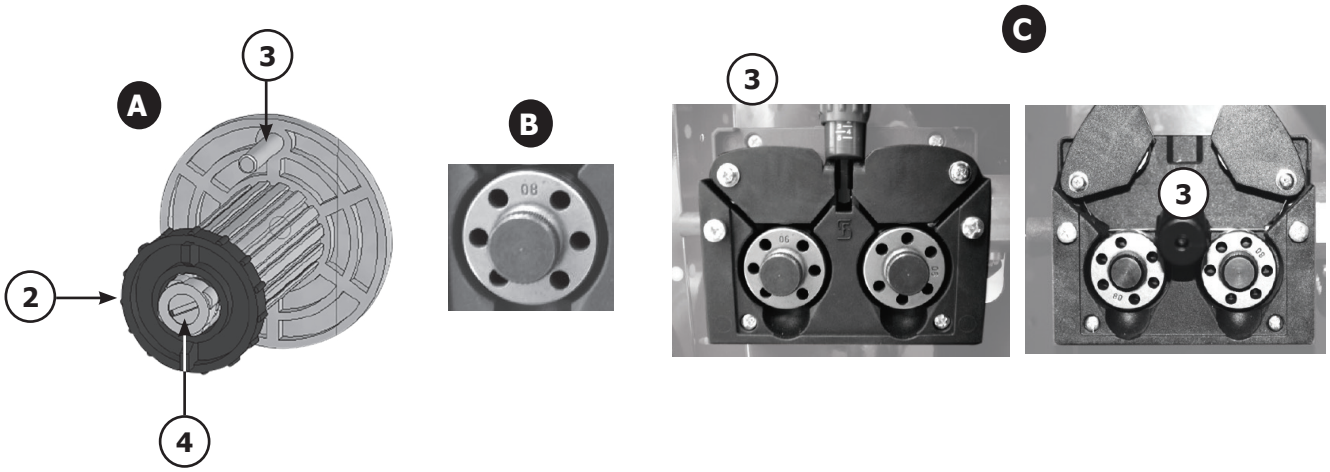

V

VI

250T / 320T :

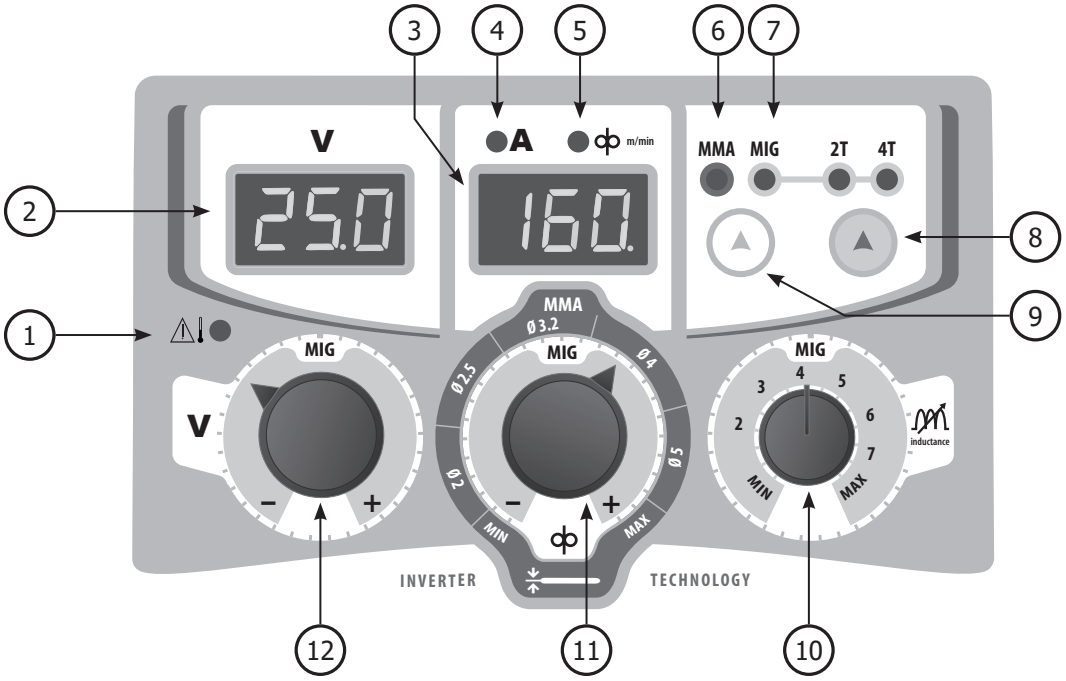

FV 220M / 400T :

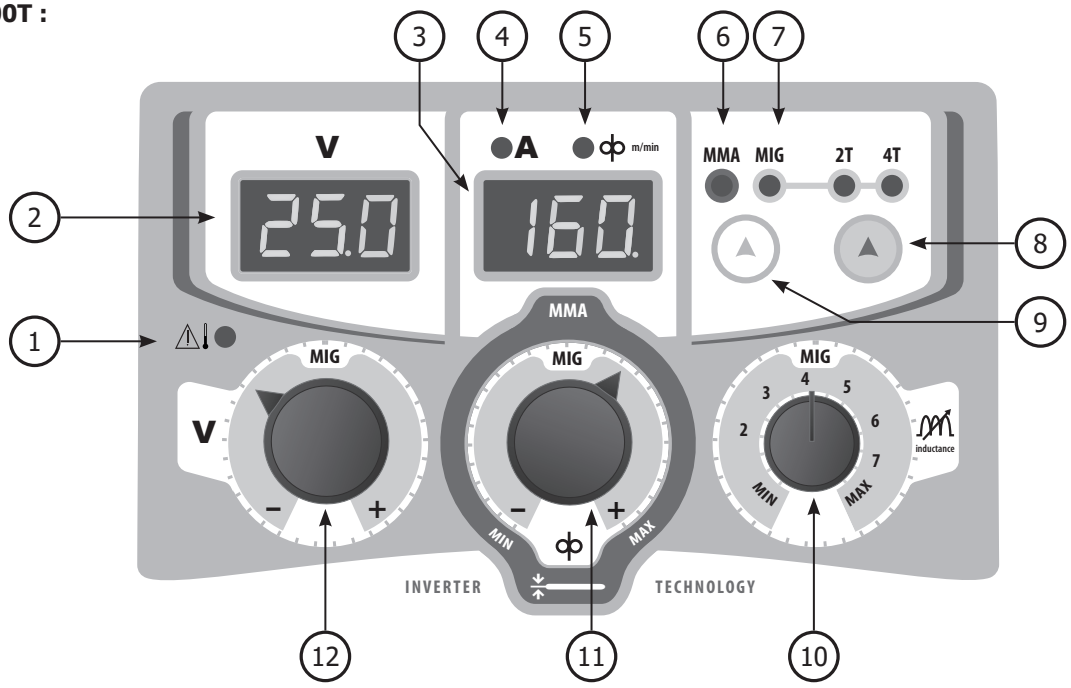

VII

MULTIWELD 250T

ACIER / STEEL INOX / STAINLESS ArCO2

		V	Φ
0.8	0.6	13›15	2›5
	0.8	15›17	2›4
	1.0	17›19	2›4
1	0.6	15›17	2›5
	0.8	16›18	2›4
	1.0	18›20	2›4
1.5	0.6	16›18	4›6
	0.8	17›19	3›5
	1.0	19›21	3›5
2	0.6	17›19	5›8
	0.8	18›20	5›8
	1.0	20›22	5›8
4	0.8	20›22	8›10
	1.0	21›23	8›10
6	1.0	22›25	10›12
8	1.0	22›25	12›14

ALU Ar

		V	Φ
0.8	0.8	15›17	3›5
	1.0	16›18	3›5
1	0.8	16›18	5›8
	1.0	17›19	3›5
1.5	0.8	17›19	8›10
	1.0	18›20	5›8
2	0.8	18›20	10›12
	1.0	19›21	8›10
4	0.8	20›22	11›13
	1.0	20›22	10›12
6	1.0	21›23	11›13
8	1.0	22›24	12›15

ACIER / STEEL CO2

		V	Φ
0.8	0.6	15›17	2›5
	0.8	16›18	2›4
	1.0	18›20	2›4
1	0.6	16›18	3›5
	0.8	17›19	2›4
	1.0	19›21	2›4
1.5	0.6	17›19	5›7
	0.8	18›20	4›6
	1.0	20›22	3›5
2	0.6	18›20	6›9
	0.8	19›21	6›9
	1.0	21›23	5›8
4	0.8	20›22	9›11
	1.0	22›24	8›10
6	1.0	23›26	10›12
8	1.0	23›26	12›15

MULTIWELD 320T

ACIER / STEEL INOX / STAINLESS ArCO2

		V	Φ
0.8	0.8	15›16	3›4
	1.0	17›19	3›4
1	0.8	15›17	3›5
	1.0	17›19	3›4
1.5	0.8	17›18	4›6
	1.0	19›20	4›5
	1.2	17›19	3›4
2	0.8	18›20	6›9
	1.0	21›22	6›8
	1.2	18›19	3›4
4	0.8	19›23	8›10
	1.0	22›23	9›11
	1.2	20›22	5›6
6	0.8	24›25	11›13
	1.0	23›26	11›13
	1.2	23›24	6›7
8	0.8	28›30	15›17
	1.0	24›27	14›15
	1.2	24›27	7›9
10	1.2	25›30	9›11

ALU Ar

		V	Φ
0.8	0.8	15›16	6›7
	1.0	15›16	5›6
1	0.8	15›16	6›7
	1.0	15›16	5›6
1.5	0.8	16›17	7›8
	1.0	15›16	6›7
2	0.8	17›18	8›9
	1.0	15›16	6›7
	1.2	15›16	5›6
4	0.8	18›19	10›12
	1.0	18›20	9›11
	1.2	16›18	7›8
6	0.8	19›21	13›15
	1.0	21›23	12›13
	1.2	18›20	9›11
8	0.8	22›24	16›18
	1.0	24›26	14›16
	1.2	22›25	12›14
10	1.2	26›29	16›18

ACIER / STEEL CO2

		V	Φ
0.8	0.8	16›18	3›4
	1.0	17›19	2›4
1	0.8	16›18	3›5
	1.0	17›20	2›4
1.5	0.8	18›20	5›6
	1.0	20›22	3›5
	1.2	18›20	3›4
2	0.8	19›20	6›8
	1.0	22›23	5›8
	1.2	20›21	3›4
4	0.8	21›23	9›11
	1.0	23›25	9›10
	1.2	23›24	5›6
6	0.8	25›27	12›14
	1.0	25›27	11›13
	1.2	25›26	6›7
8	0.8	29›31	15›17
	1.0	25›28	12›16
	1.2	27›31	7›9
10	1.2	28›31	9›11

MULTIWELD FV 220M

ACIER / STEEL INOX / STAINLESS ArCO2

		V	Φ
0.8	0.6	14›15	4›5
	0.8	14›15	3›4
	1.0	15›16	3›4
1	0.6	15›16	4›5
	0.8	15›17	4›5
	1.0	16›17	3›4
1.5	0.6	16›18	5›7
	0.8	17›19	5›7
	1.0	17›19	3›4
2	0.6	17›19	6›9
	0.8	18›21	7›9
	1.0	18›19	5›6
4	0.8	23›25	12›14
	1.0	20›21	6›8
6	1.0	23›25	8›10

ALU Ar

		V	Φ
0.8	0.8	14›15	6›7
	1.0	14›15	5›6
1	0.8	15›16	6›7
	1.0	15›16	5›6
1.5	0.8	16›17	7›8
	1.0	15›16	6›7
2	0.8	17›18	8›9
	1.0	15›16	6›7
4	0.8	18›19	10›12
	1.0	18›20	9›11
6	1.0	21›22	12›13

ACIER / STEEL CO2

		V	Φ
0.8	0.6	15›16	4›5
	0.8	15›16	3›4
	1.0	16›17	3›4
1	0.6	16›17	4›5
	0.8	16›17	4›5
	1.0	17›18	3›4
1.5	0.6	17›19	5›7
	0.8	18›20	5›7
	1.0	18›20	3›4
2	0.6	18›20	6›9
	0.8	19›22	7›9
	1.0	19›22	5›6
4	0.8	23›25	12›14
	1.0	21›22	6›8
6	1.0	23›25	8›10

MULTIWELD 400T

ACIER / STEEL INOX / STAINLESS ArCO2

		V	
0.8	0.8	15›16	3›4
	1.0	16›18	3›4
1	0.8	15›17	3›5
	1.0	16›18	3›4
1.5	0.8	17›18	4›6
	1.0	19›20	4›5
	1.2	17›19	3›4
2	0.8	18›20	6›9
	1.0	21›22	6›8
	1.2	18›19	3›4
4	0.8	19›23	8›10
	1.0	22›23	9›11
	1.2	20›22	5›6

		V	
6	0.8	24›25	11›13
	1.0	23›26	11›13
	1.2	23›24	6›7
8	0.8	26›28	15›17
	1.0	24›27	14›15
	1.2	24›26	7›9
10	1.0	26›29	9›11
	1.2	25›30	9›11
12	1.2	28›30	10›12
	1.6	26›29	6›8

ALU Ar

		V	
0.8	0.8	15›16	6›7
	1.0	15›16	5›6
1	0.8	15›16	6›7
	1.0	15›16	5›6
1.5	0.8	16›17	7›8
	1.0	15›16	6›7
2	0.8	17›18	8›9
	1.0	15›16	6›7
	1.2	15›16	5›6
4	0.8	18›19	10›12
	1.0	18›20	9›11
	1.2	16›18	7›8

		V	
6	0.8	19›21	13›15
	1.0	21›23	12›13
	1.2	18›20	9›11
8	0.8	22›24	16›18
	1.0	24›26	14›16
	1.2	22›25	12›14
10	1.2	26›29	16›18

ACIER / STEEL CO2

		V	
0.8	0.8	16›18	3›4
	1.0	17›19	2›4
1	0.8	16›18	3›5
	1.0	17›20	2›4
1.5	0.8	18›20	5›6
	1.0	19›21	3›5
	1.2	18›20	3›4
2	0.8	19›20	6›8
	1.0	21›22	5›8
	1.2	20›21	3›4
4	0.8	21›23	9›11
	1.0	23›25	9›10
	1.2	22›23	5›6

		V	
6	0.8	25›27	12›14
	1.0	24›26	11›13
	1.2	24›25	6›7
8	0.8	29›31	15›17
	1.0	25›28	12›15
	1.2	26›29	7›9
10	1.0	26›29	15›16
	1.2	28›31	9›11
12	1.2	29›32	10›12
	1.6	26›30	5›7

ACIER / STEEL No Gas

		V	
0.8	0.9	15›16	4›5
	1.0	16›17	4›5
1	0.9	15›16	4›5
	1.0	16›17	4›5
1.5	0.9	16›17	5›6
	1.0	17›18	5›6
	1.2	17›18	5›6
2	0.9	17›18	6›7
	1.0	18›19	6›7
	1.2	18›19	6›7
4	0.9	19›21	9›11
	1.0	20›21	8›10
	1.2	19›22	7›9

		V	
6	1.0	22›23	9›12
	1.2	21›23	8›11
8	1.0	23›25	12›14
	1.2	23›26	11›13
10	1.0	25›27	14›16
	1.2	23›26	11›13
12	1.2	29›32	14›16

PIÈCES DE RECHANGE / SPARE PARTS / ERSATZTEILE / PIEZAS DE REPUESTO / ЗАПЧАСТИ / RESERVE ONDERDELEN / PEZZI DI RICAMBIO / ERSATZTEILE

MULTIWELD 250T :

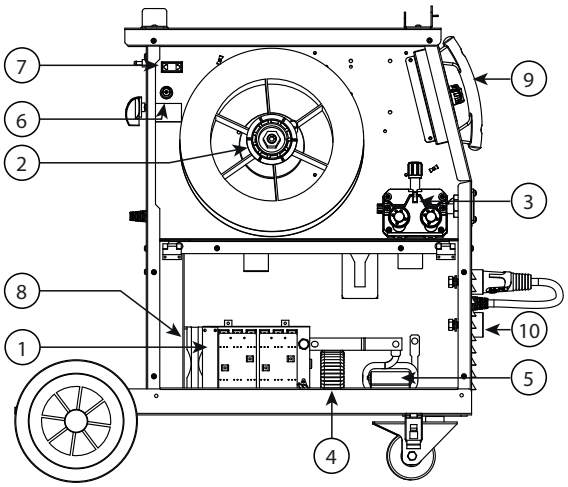

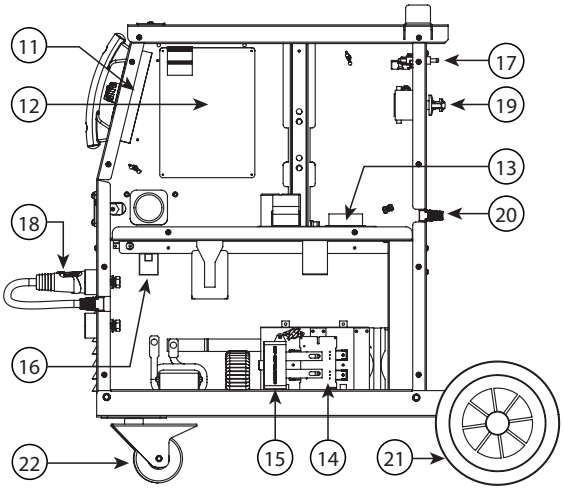

1	Redresseur secondaire PCBA / Secondary Rectifier PCBA / Rectificador secundario PCBA / Вспомогательный выпрямитель PCBA / Secondaire gelijkrichter PCB / Raddrizzatore secondario PCBA / Sekundärgleichrichter PCBA	53569
2	Support de bobine de fil / Wire Reel Support / Soporte bobina de hilo / Держатель бобины / Spoelhouder / Supporto bobina del filo / Halterung der Drahtspule	71608 56056
3	Moto-dévidoir / Wire feeder / Motodevanadera / Моторизированный подающий механизм / Draadaanvoersysteem / Traina-filo / Drahtvorschubmotor	C51563
4	Transformateur principal / Main Transformer / Transformador principal / Основной трансформатор / Hoofdtransformateur / Trasformatore principale / Haupt-Transformator	53570
5	Inductance de sortie / Output Inductor / Inductancia de salida / Индуктивность на выходе / Output Inductor / Induttanza d'uscita / Ausgangsspule	53571
6	Porte-fusible / Fuse Holder / Porta-fusibles / Патрон плавкого предохранителя / Zekeringhouder / Porta-fusibile / Siche-rungshalter	53348
7	Prise de réchauffeur de gaz / GAS Heating Socket / Toma de calentador de gas / Гнездо подогревателя газа / Stekker gasverwarmer / Presa di riscaldamento del gas / Gasvorwärmeranschluss	53436
8	Ventilateur / Fan / Ventilador / Вентилятор / Ventilator / Ventilatore / Ventilator	C16533
9	Poignées / Handles / Mangos / Ручки / Handvaten / Impugnature / Griffe	56047
10	Connecteur Texas / Texas Connector / Conector Texas / Разъем Texas / Texas koppeling / Connettore Texas / Texas-Stecker	51469
11	Carte d'affichage / Display PCBA / Tarjeta de vídeo / Плата индикации / Videokaart / Scheda video / Display-Platine	53572
12	Carte de contrôle / Control PCBA / Tarjeta de control / Контрольная плата / Controle-kaart / Scheda di controllo / Kontroll-Platine	53573
13	Carte redresseur primaire / Primary Rectifier PCBA / Tarjeta de rectificador primario / Первичная плата выпрямителя / Kaart primaire gelijkrichter / Scheda raddrizzatore primaria / Primärgleichrichter-Platine	53574
14	Carte IGBT / IGBT PCBA / Tarjeta IGBT / Плата IGBT / IGBT kaart / Scheda IGBT / IGBT Platine	53575
15	Condensateur / Capacitor / Condensador / Конденсатор / Condensator / Condensatore / Kondensator	53576
16	Carte filtre / Filter PCBA / Tarjeta filtro / Плата фильтра / Filter kaart / Scheda filtro / Filterplatine	53577
17	Electrovanne / Solenoid valve / Electroválvula / Электроклапан / Magneetventiel / Elettrovalvola / Elektromagnetisches Ventil	71542 71702 71703
18	Câble d'inversion de polarité / Polarity invertion cable / Cable de inversión de polaridad / Кабель инверсии полярности / Polariteit inversie kabel / Cavo d'inversione di polarità / Polaritätswahlkabel	71918
19	Commutateur / Logic Switch / Conmutador / Переключатель / Schakelaar / Commutatore / Schalter	53578
20	Câble d'alimentation / Power Cable / Cable de alimentación eléctrica / Шнур питания / Voedingskabel / Cavo di alimenta-zione / Netzleitung	C21474
21	Roues arrière / Rear wheels / Hinterräder / Ruedas traseras / Задние колеса / Achterwielen / Ruote posteriori	71375
22	Roues avant / Front wheels / Ruedas delanteras / Передние колеса / Voorste wielen / Ruote anteriori / Vorderräder	71361

PIÈCES DE RECHANGE / SPARE PARTS / ERSATZTEILE / PIEZAS DE REPUESTO / ЗАПЧАСТИ / RESERVE ONDERDELEN / PEZZI DI RICAMBIO / ERSATZTEILE

MULTIWELD 320T :

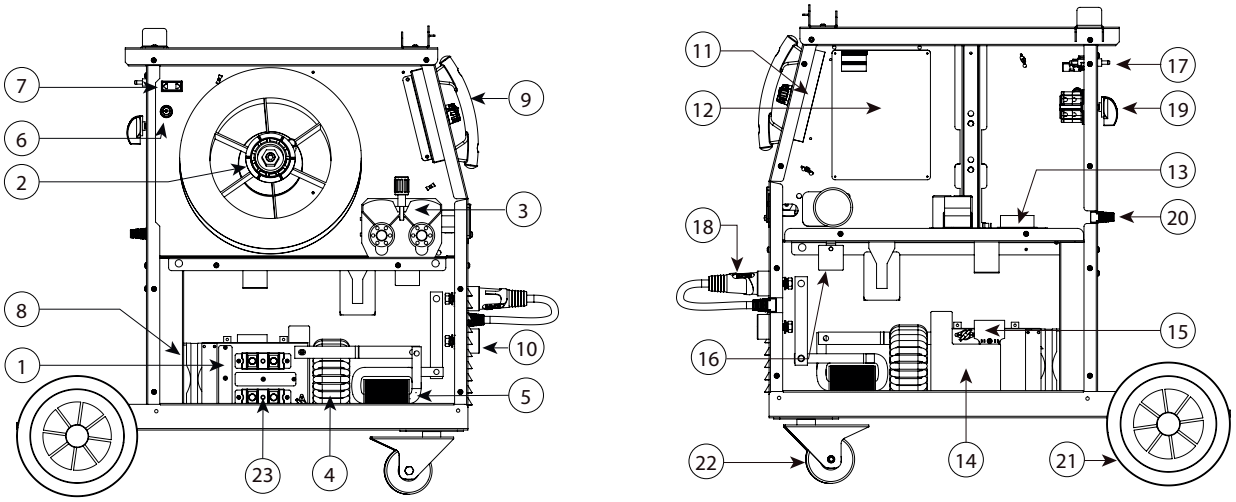

1	Redresseur secondaire PCBA / Secondary Rectifier PCBA / Rectificador secundario PCBA / Вспомогательный выпрямитель PCBA / Secondaire gelijkrichter PCB / Raddrizzatore secondario PCBA / Sekundärgleichrichter PCBA	B4084
2	Support de bobine de fil / Wire Reel Support / Soporte bobina de hilo / Держатель бобины / Spoelhouder / Supporto bobina del filo / Halterung der Drahtspule	71608 56056
3	Moto-dévidoir / Wire feeder / Motodevanadera / Моторизированный подающий механизм / Draadaanvoersysteem / Traina-filo / Drahtvorschubmotor	53589
4	Transformateur principal / Main Transformer / Transformador principal / Основной трансформатор / Hoofdtransformateur / Trasformatore principale / Haupt-Transformator	53590
5	Inductance de sortie / Output Inductor / Inductancia de salida / Индуктивность на выходе / Output Inductor / Induttanza d'uscita / Ausgangsspule	53591
6	Porte-fusible / Fuse Holder / Porta-fusibles / Патрон плавкого предохранителя / Zekeringhouder / Porta-fusibile / Siche-rungshalter	53348
7	Prise de réchauffeur de gaz / GAS Heating Socket / Toma de calentador de gas / Гнездо подогревателя газа / Stekker gasverwarmer / Presa di riscaldamento del gas / Gasvorwärmeranschluss	53436
8	Ventilateur / Fan / Ventilador / Вентилятор / Ventilator / Ventilatore / Ventilator	53592
9	Poignées / Handles / Mangos / Ручки / Handvaten / Impugnature / Griffe	56047
10	Connecteur Texas / Texas Connector / Conector Texas / Разъем Texas / Texas koppeling / Connettore Texas / Texas-Stecker	51478
11	Carte d'affichage / Display PCBA / Tarjeta de vídeo / Плата индикации / Videokaart / Scheda video / Display-Platine	53572
12	Carte de contrôle / Control PCBA / Tarjeta de control / Контрольная плата / Controle-kaart / Scheda di controllo / Kontroll-Platine	53593
13	Carte redresseur primaire / Primary Rectifier PCBA / Tarjeta de rectificador primario / Первичная плата выпрямителя / Kaart primaire gelijkrichter / Scheda raddrizzatore primaria / Primärgleichrichter-Platine	53574
14	Carte IGBT / IGBT PCBA / Tarjeta IGBT / Плата IGBT / IGBT kaart / Scheda IGBT / IGBT Platine	53594
15	Pilote IGBT PCBA / IGBT driver PCBA	53595
16	Carte filtre / Filter PCBA / Tarjeta filtro / Плата фильтра / Filter kaart / Scheda filtro / Filterplatine	53577
17	Electrovanne / Solenoid valve / Electroválvula / Электроклапан / Magneetventiel / Elettrovalvola / Elektromagnetisches Ventil	71542 71702 71703
18	Câble d'inversion de polarité / Polarity invertion cable / Cable de inversión de polaridad / Кабель инверсии полярности / Polariteit inversie kabel / Cavo d'inversione di polarità / Polaritätswahlkabel	53596
19	Commutateur / Logic Switch / Conmutador / Переключатель / Schakelaar / Commutatore / Schalter	53578
20	Câble d'alimentation / Power Cable / Cable de alimentación eléctrica / Шнур питания / Voedingskabel / Cavo di alimenta-zione / Netzleitung	B3104
21	Roues arrière / Rear wheels / Hinterräder / Ruedas traseras / Задние колеса / Achterwielen / Ruote posteriori	71375
22	Roues avant / Front wheels / Ruedas delanteras / Передние колеса / Voorste wielen / Ruote anteriori / Vorderräder	71361
23	Module redresseur à récupération rapide / Fast Recovery Rectifier Module	53597

PIÈCES DE RECHANGE / SPARE PARTS / ERSATZTEILE / PIEZAS DE REPUESTO / ЗАПЧАСТИ / RESERVE ONDERDELEN / PEZZI DI RICAMBIO / ERSATZTEILE

MULTIWELD FV 220M :

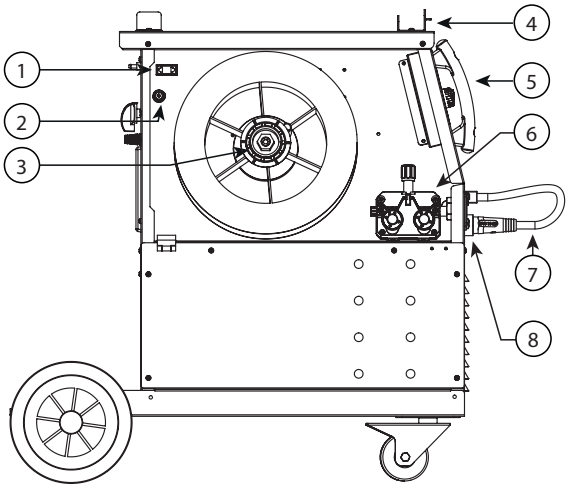

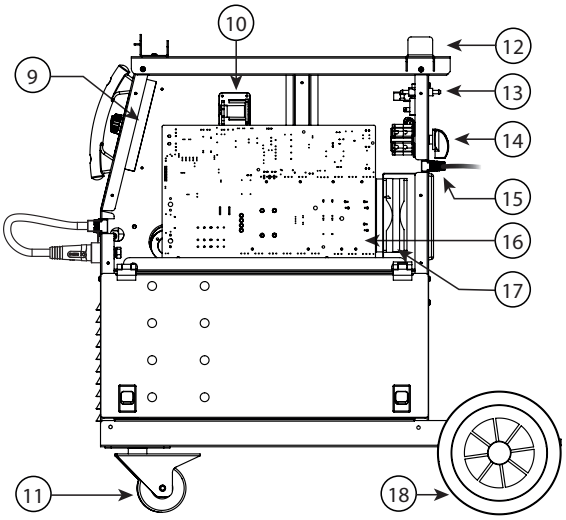

1	Prise de réchauffeur de gaz / GAS Heating Socket / Toma de calentador de gas / Гнездо подогревателя газа / Stekker gasverwarmer / Presa di riscaldamento del gas / Gasvorwärmeranschluss	53436
2	Porte-fusible / Fuse Holder / Porta-fusibles / Патрон плавкого предохранителя / Zekeringhouder / Porta-fusibile / Sicherungshalter	53348
3	Support de bobine de fil / Wire Reel Support / Soporte bobina de hilo / Держатель бобины / Spoelhouder / Supporto bobina del filo / Halterung der Drahtspule	71608 56056
4	Support de torche / Torch support / Soporte de antorcha / Подставка для горелки / Toortshouder / Supporto torcia / Brennerhalterung	98853GF
5	Poignées / Handles / Mangos / Ручки / Handvaten / Impugnature / Griffe	56047
6	Moto-dévidoir / Wire feeder / Motodevanadera / Моторизированный подающий механизм / Draadaanvoersysteem / Trainafilo / Drahtvorschubmotor	C51563
7	Câble d'inversion de polarité / Polarity invertion cable / Cable de inversión de polaridad / Кабель инверсии полярности / Polariteit inversie kabel / Cavo d'inversione di polarità / Polaritätswahlkabel	B3125
8	Connecteur Texas / Texas Connector / Conector Texas / Разъем Texas / Texas koppeling / Connettore Texas / Texas-Stecker	51468
9	Carte d'affichage / Display PCBA / Tarjeta de vídeo / Плата индикации / Videokaart / Scheda video / Display-Platine	B4096
10	PFC inductor	63691
11	Roues avant / Front wheels / Ruedas delanteras / Передние колеса / Voorste wielen / Ruote anteriori / Vorderräder	71361
12	Support de câble arrière / Rear Cable Support / Soporta de cable trasero / Задняя подставка для кабеля / Hulptransformator / Trasformatore ausiliario / Kabelhalterung hinten	98854GF
13	Electrovanne / Solenoid valve / Electroválvula / Электроклапан / Magneetventiel / Elettrovalvola / Elektromagnetisches Ventil	71542 71702 71703
14	Interrupteur /Switch / An/ Aus- Schalter /Interruptor / Переключатель / Schakelaar / Interruttore / Schakelaar	C51545
15	Câble d'alimentation / Power Cable / Cable de alimentación eléctrica / Шнур питания / Voedingskabel / Cavo di alimentazione / Netzleitung	C51142
16	Carte principale / Main circuit board / Hauptplatine / Tarjeta principal / Основная плата / Hoofd printplaat / Carta principale	B4108
17	Ventilateur / Fan / Ventilator / Ventilador / Вентилятор / Ventilator / Ventilatore / Ventilator	C16533
18	Roue diamètre 200mm / 200mm diameter wheels / 200mm Durchmesser Rad / Rueda diámetro 200mm / Колесо диаметром 200 мм / Wiel 200mm diameter	71375

PIÈCES DE RECHANGE / SPARE PARTS / ERSATZTEILE / PIEZAS DE REPUESTO / ЗАПЧАСТИ / RESERVE ONDERDELEN / PEZZI DI RICAMBIO / ERSATZTEILE

MULTIWELD 400T :

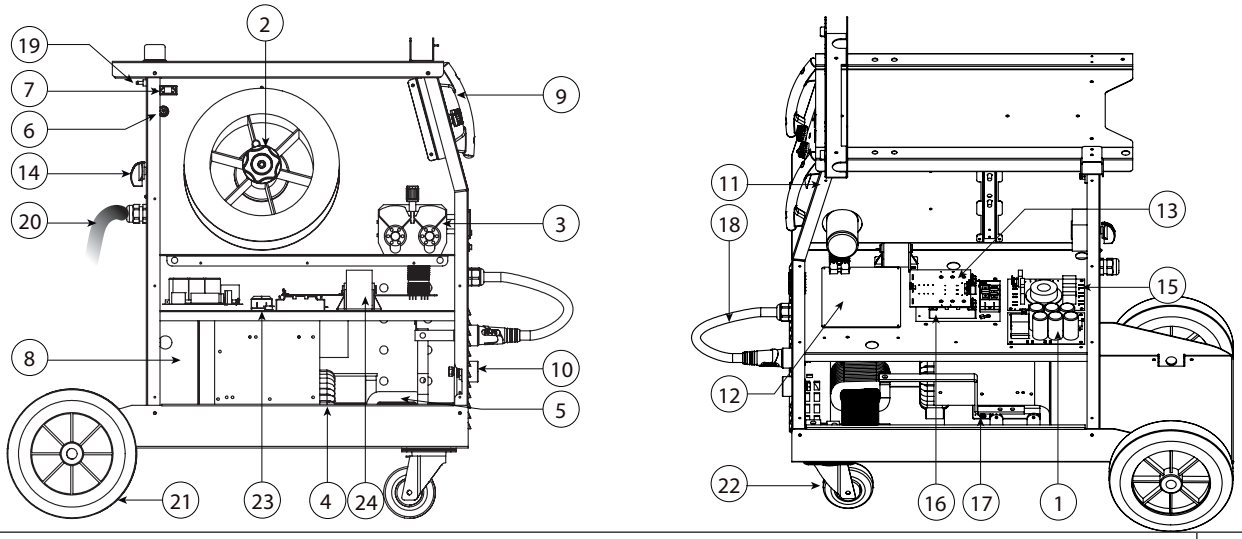

1	Carte de puissance primaire / Power input circuit board / Primäre Leistungsplatine / Tarjeta de potencia primaria / Первичная силовая плата / Primaire voedingskaart / Scheda di potenza primaria / Płyta zasilania podstawowego	53561
2	Support de bobine de fil / Wire Reel Support / Soporte bobina de hilo / Держатель бобины / Spoelhouder / Supporto bobina del filo / Halterung der Drahtspule	71608 56056
3	Moto-dévidoir / Wire feeder / Motodevanadera / Моторизированный подающий механизм / Draadaanvoersysteem / Traina-filo / Drahtvorschubmotor	C51568
4	Transformateur principal / Main Transformer / Transformador principal / Основной трансформатор / Hoofdtransformateur / Trasformatore principale / Haupt-Transformator	C32586
5	Inductance de sortie / Output Inductor / Inductancia de salida / Индуктивность на выходе / Output Inductor / Induttanza d'uscita / Ausgangsspule	C32587
6	Porte-fusible / Fuse Holder / Porta-fusibles / Патрон плавкого предохранителя / Zekeringhouder / Porta-fusibile / Siche-rungshalter	53348
7	Prise de réchauffeur de gaz / GAS Heating Socket / Toma de calentador de gas / Гнездо подогревателя газа / Stekker gasverwarmer / Presa di riscaldamento del gas / Gasvorwärmeranschluss	53436
8	Ventilateur / Fan / Ventilador / Вентилятор / Ventilator / Ventilatore / Ventilator	53560
9	Poignées / Handles / Mangos / Ручки / Handvaten / Impugnature / Griffe	56047
10	Connecteur Texas / Texas Connector / Conector Texas / Разъем Texas / Texas koppeling / Connettore Texas / Texas-Stecker	51461
11	Carte d'affichage / Display PCBA / Tarjeta de vídeo / Плата индикации / Videokaart / Scheda video / Display-Platine	B4137
12	Carte de contrôle / Control PCBA / Tarjeta de control / Контрольная плата / Controle-kaart / Scheda di controllo / Kontroll-Platine	B4139
13	Carte de contrôle des IGBT / IGBT control board / IGBT-Steuerplatine / Tarjeta de control IGBT / Плата управления IGBT / Controle-kaart IGBT / Scheda di controllo di IGBT / Płyta sterująca IGBT	B4141
14	Commutateur marche / arrêt / On/off switch / Schalter Start/Stop / Conmutador encendido / apagado / Переключатель ВКЛ/ВЫКЛ / Schakelaar aan/uit / Commutatore avvio / arresto / Włącznik/wyłącznik	51061
15	CARTE CEM / EMC BOARD / EMV-PLATINE / TARJETA CEM / ПЛАТА CEM / PRINTPLAAT / CARTA CEM / KARTA EMC	53568
16	Modules IGBT / IGBT module / IGBT-Module / Módulo IGBT / Модули IGBT / Modules IGBT / Moduli IGBT / Moduły IGBT	53566
17	Carte de redressement secondaire / Output rectifier circuit board / Sekundäre Gleichrichtungsplatine / Tarjeta de recuperación secundaria / Вторичная плата выпрямления / Secondaire printplaat / Carta di recupero secondaria / Karta rektyfikacji wtórnej	53559
18	Câble d'inversion de polarité / Polarity invertion cable / Cable de inversión de polaridad / Кабель инверсии полярности / Polariteit inversie kabel / Cavo d'inversione di polarità / Polaritätswahlkabel	B3159
19	Electrovanne / Solenoid valve / Electroválvula / Электроклапан / Magneetventiel / Elettrovalvola / Elektromagnetisches Ventil	71540
20	Câble d'alimentation / Power Cable / Cable de alimentación eléctrica / Шнур питания / Voedingskabel / Cavo di alimenta-zione / Netzleitung	21470
21	Roues arrière / Rear wheels / Hinterräder / Ruedas traseras / Задние колеса / Achterwielen / Ruote posteriori	71375
22	Roues avant / Front wheels / Ruedas delanteras / Передние колеса / Voorste wielen / Ruote anteriori / Vorderräder	71361
23	Pont redresseur / Diode bridge / Gleichrichtungsbrücke / Puente rectificador / Выпрямительный мост / Gelijkrichter punt / Ponte raddrizzatore / Mostek prostowniczy	53567
24	Condensateur / Capacitor / Kondensatoren / Condensador / Конденсаторы / Condensatoren / Condensatori	C64062

SCHÉMA ÉLECTRIQUE / CIRCUIT DIAGRAM /SCHALTPLAN/ DIAGRAMA ELECTRICO /ЭЛЕКТРИЧЕСКАЯ СХЕМА / ELEKTRISCHE SCHEMA / SCEMA ELETTRICO

MULTIWELD 250T :

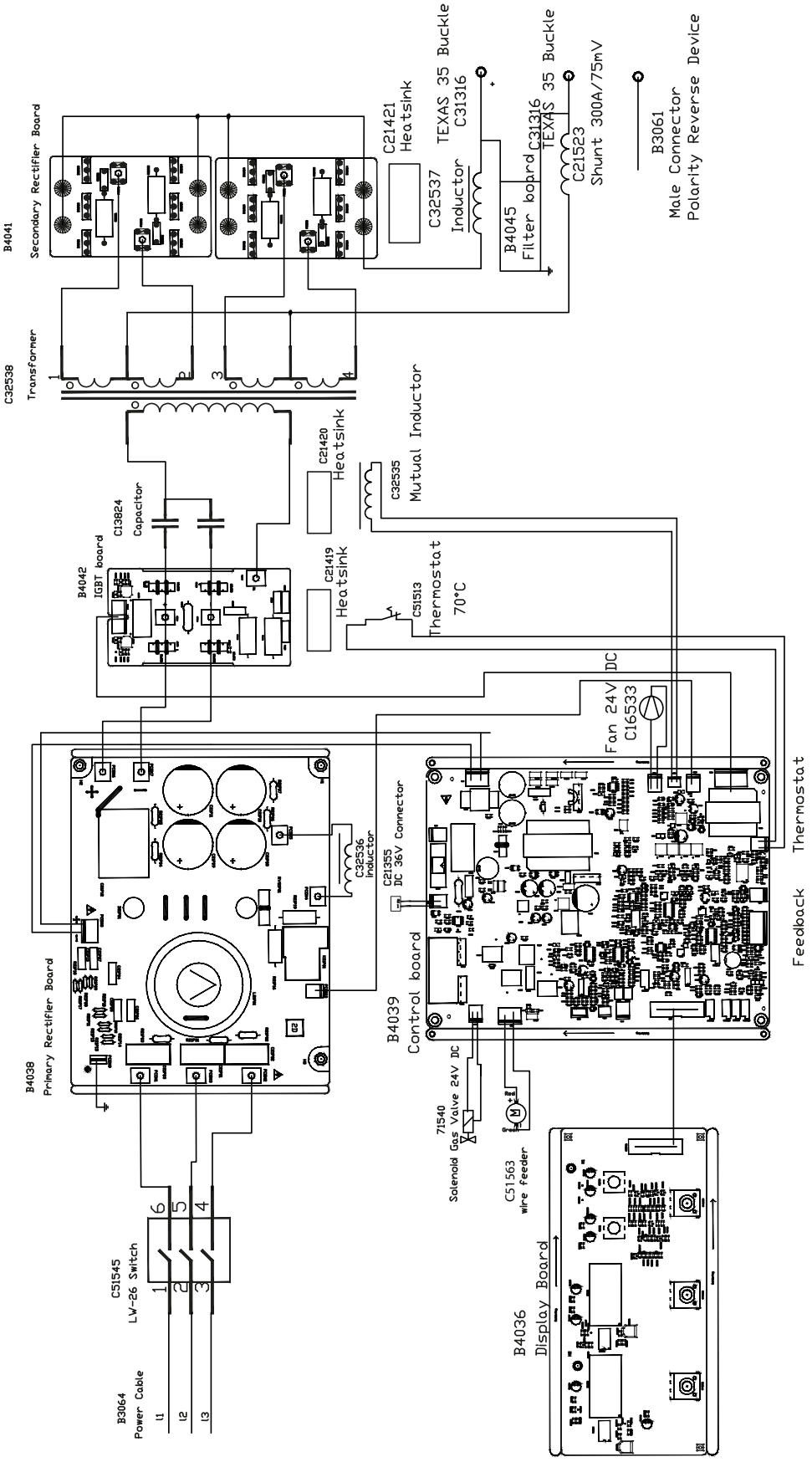

SCHÉMA ÉLECTRIQUE / CIRCUIT DIAGRAM /SCHALTPLAN/ DIAGRAMA ELECTRICO /ЭЛЕКТРИЧЕСКАЯ СХЕМА / ELEKTRISCHE SCHEMA / SCEMA ELETTRICO

MULTIWELD 320T :

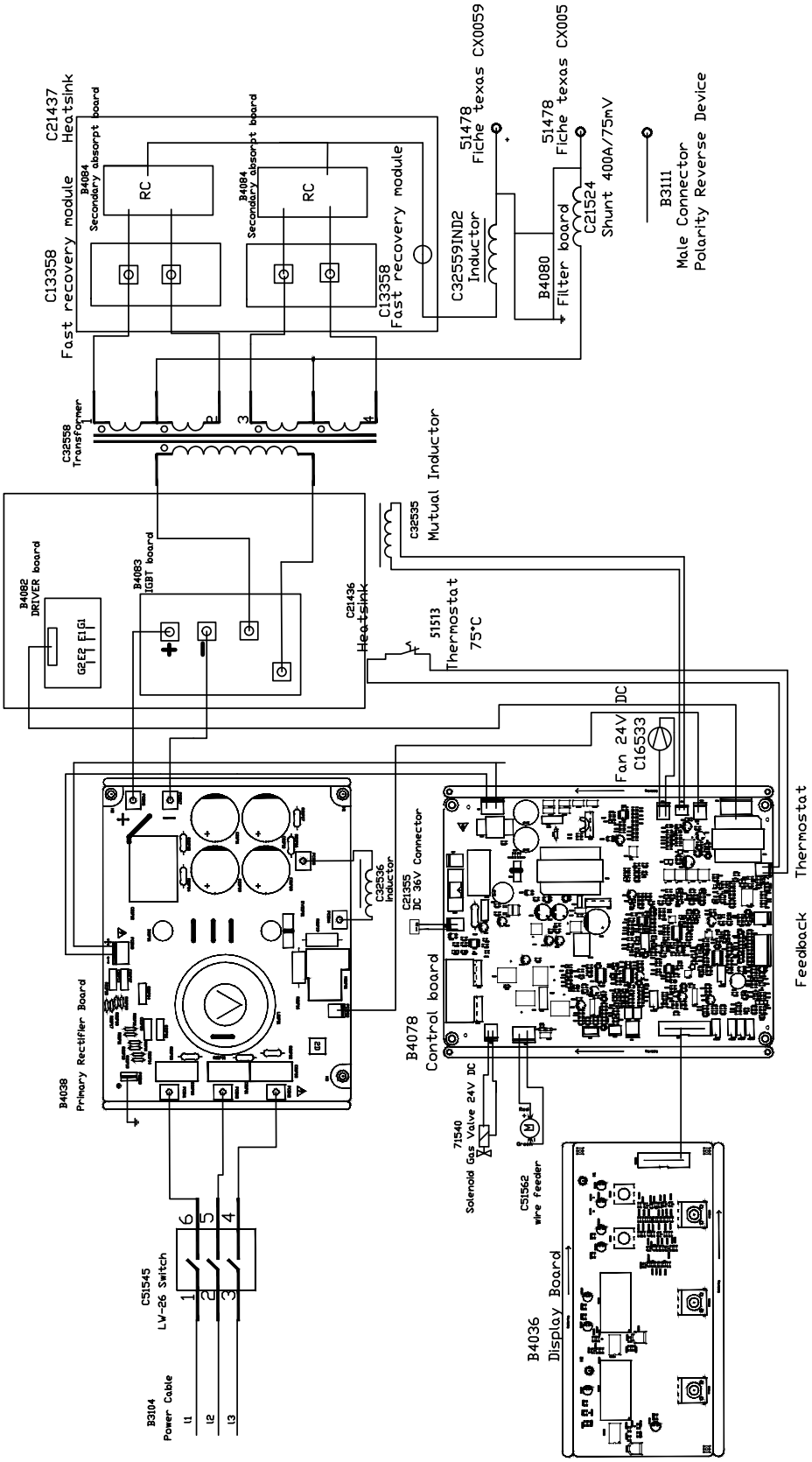

SCHÉMA ÉLECTRIQUE / CIRCUIT DIAGRAM /SCHALTPLAN/ DIAGRAMA ELECTRICO /ЭЛЕКТРИЧЕСКАЯ СХЕМА / ELEKTRISCHE SCHEMA / SCEMA ELETTRICO

MULTIWELD 220M FV :

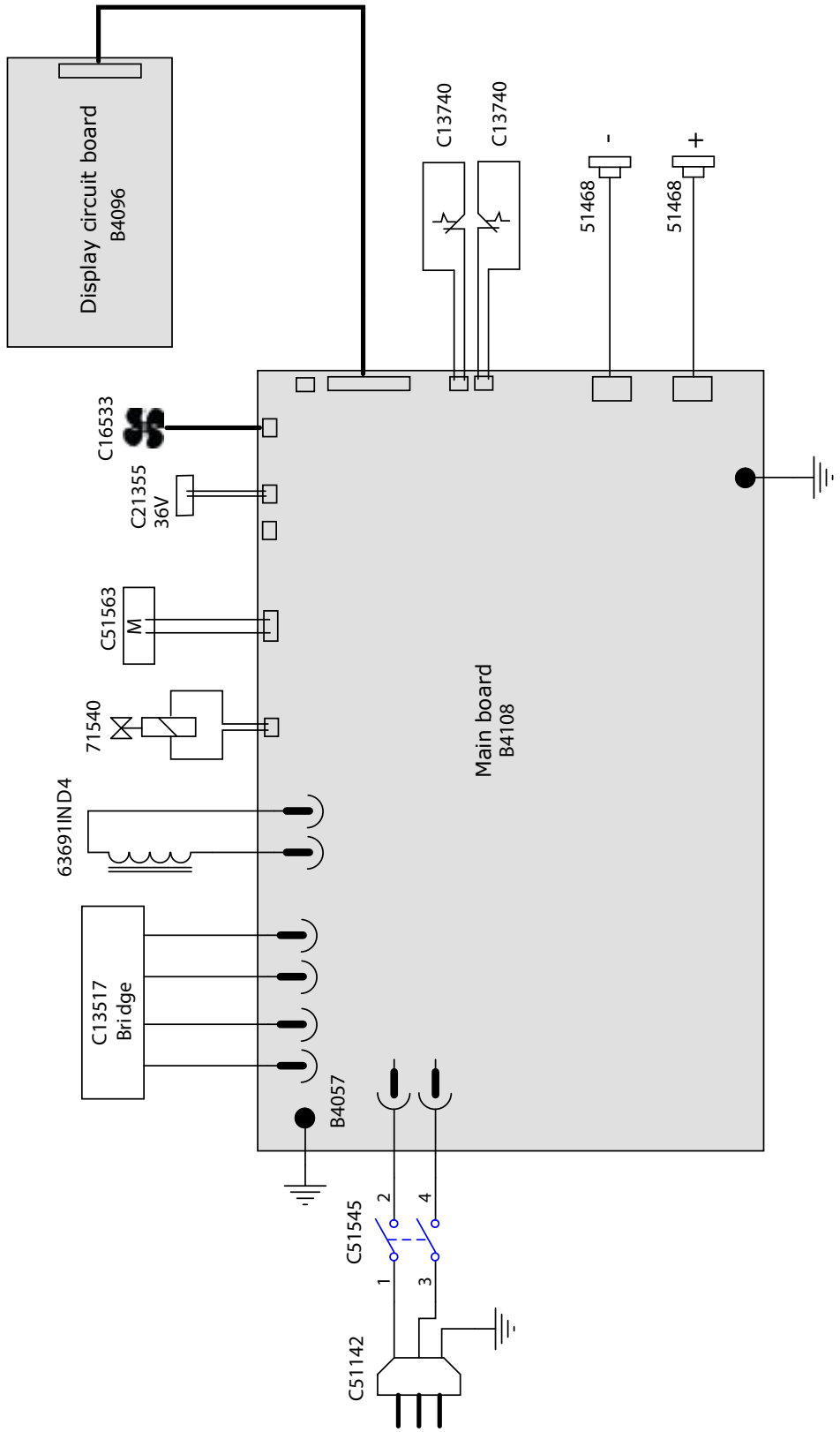

SCHÉMA ÉLECTRIQUE / CIRCUIT DIAGRAM /SCHALTPLAN/ DIAGRAMA ELECTRICO /ЭЛЕКТРИЧЕСКАЯ СХЕМА / ELEKTRISCHE SCHEMA / SCEMA ELETTRICO

MULTIWELD 400T :

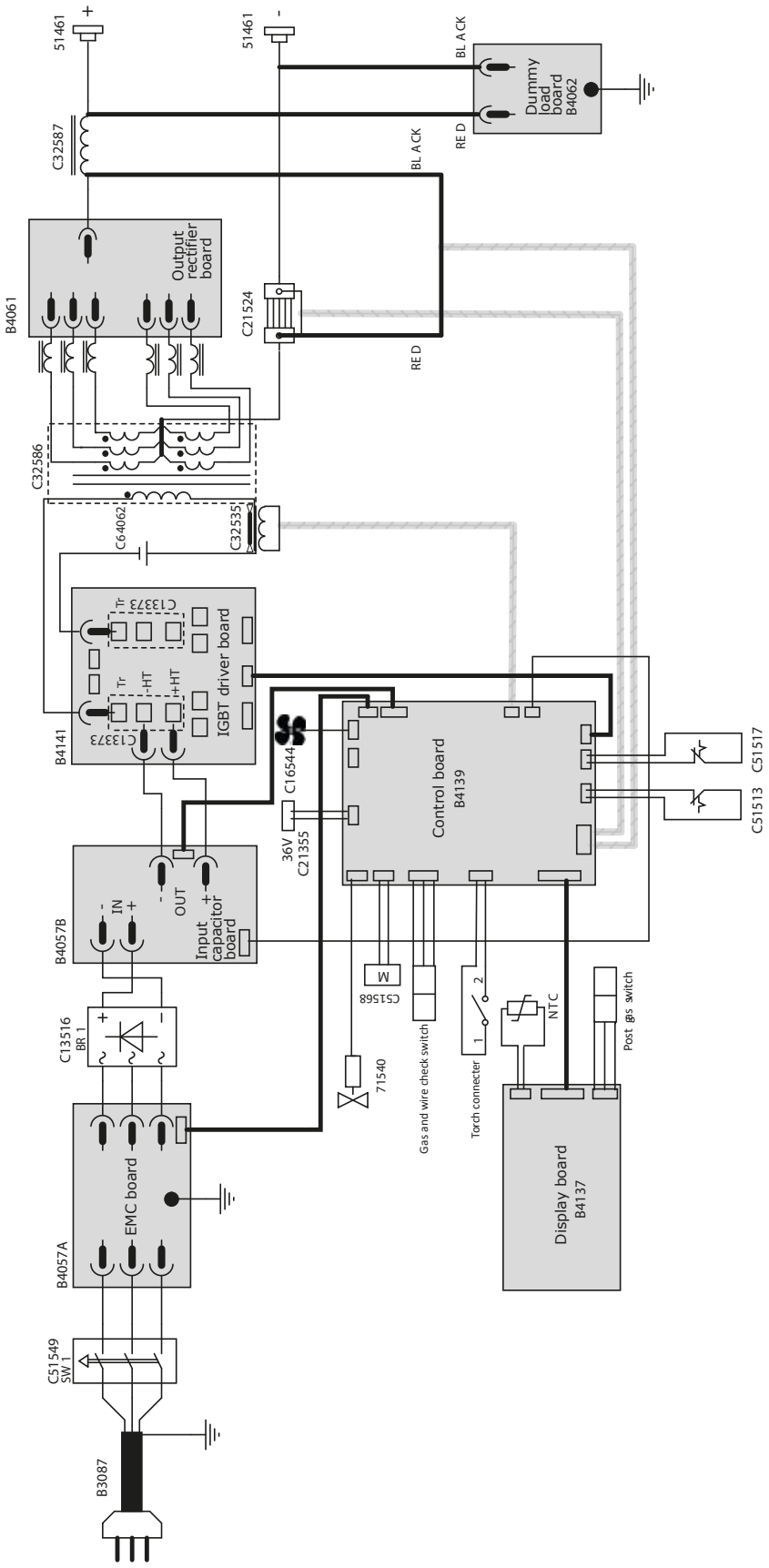

SPÉCIFICATIONS TECHNIQUES / TECHNICAL SPECIFICATIONS / TECHNISCHE DATEN / ESPECIFICACIONES TÉCNICAS / ТЕХНИЧЕСКИЕ СПЕЦИФИКАЦИИ / TECHNISCHE GEGEVENS / SPECIFICHE TECNICHE

		250T		320T		400T	
Primaire / Primary / Primär / Primario / Первичка / Primaire / Primario							
Tension d'alimentation / Power supply voltage / Versorgungsspannung / Tensión de red eléctrica / Напряжение питания / Voedingsspanning / Tensione di alimentazione	U1	400 V +/- 15%					
Fréquence secteur / Mains frequency / Netzfrequenz / Frecuencia / Частота сети / Frequentie sector / Frequenza settore		50 / 60 Hz					
Nombre de phases / Number of phases / Anzahl der Phasen / Número de fases / Количество фаз / Aantal fasen / Numero di fase		3					
Fusible disjoncteur / Fuse / Sicherung / Fusible disyuntor / Плавкий предохранитель прерывателя / Zekering hoofd-schakelaar / Fusibile disgiuntore		16 A		16 A		32 A	
Courant d'alimentation effectif maximal / Maximum effective supply current / Corriente de alimentación efectiva máxima / Maximale effectieve voedingsstroom / Corrente di alimentazione effettiva massima / Maksymalny efektywny prąd zasilania	I1eff	7.6 A		9.6 A		19.8 A	
Courant d'alimentation maximal / Maximum supply current / Corriente de alimentación máxima / Maximale voedingsstroom / Corrente di alimentazione massima / Maksymalny prąd zasilania	I1max	13.94 A		17.51 A		33.47	
Section du cordon secteur / Mains cable section / Sectie netsnoer / Sección del cable de alimentación / Sezione del cavo di alimentazione / Odcinek przewodu zasilającego		4 x 1.5 mm²		4 x 2.5 mm²		4 x 4 mm²	
Puissance active maximale consommée / Maximum active power consumed / Consumo máximo de energía activa / Maximale actieve verbruikte vermogen / Potenza attiva massima consumata / Maksymalny pobór mocy czynnej		8 580 W		11 160 W		16 340 W	
Consommation au ralenti / Idle consumption / Consumo en ralentizado / Stationair verbruik / Consumo al minimo / Zużycie na biegu jałowym		22 W		31 W		16.1 W	
Rendement à I2max / Efficiency at I2max / Eficiencia a I2máx / Rendement bij I2max / Efficienza a I2max / Sprawność przy I2max		87 %		88 %		89 %	
Facteur de puissance à I2max / Power factor at I2max / Factor de potencia a I2max / Inschakelduur bij I2max / Ciclo di potenza a I2max / Współczynnik mocy przy I2max	λ	0.90		0.92		0.72	
Classe CEM / EMC class / Classe CEM / Klasse CEM / Classe CEM / Klasa EMC		A					
Secondaire / Secondary / Sekundär / Secundario / Вторичка / Secondair / Secondario		MMA	MIG-MAG	MMA	MIG-MAG	MMA	MIG-MAG
Tension à vide / No load voltage / Leerlaufspannung / Tensión al vacío / Напряжение холостого хода / Nullastspanning / Tensione a vuoto	U0 (TCO)	59 V		64 V		68 V	
Nature du courant de soudage / Type of welding current / Tipo de corriente de soldadura / Type lasstroom / Tipo di corrente di saldatura / Rodzaj prądu spawania		DC					
Modes de soudage / Welding modes / Modos de soldadura / Lasmodules / Modalità di saldatura / Tryby spawania		MIG-MAG / MMA					
Courant de soudage minimal / Minimum welding current / Corriente mínima de soldadura / Minimale lasstroom / Corrente minima di saldatura / Minimalny prąd spawania		40 A					
Courant de sortie nominal / Rate current output / nominaler Arbeitsstrom / Corriente de salida nominal / Номинальный выходной ток / Nominale uitgangsstroom / Corrente di uscita nominale	I2	40 → 250 A		40 → 300 A	40 → 320 A	40 → 400 A	
Tension de sortie conventionnelle / Conventional voltage output / entsprechende Arbeitsspannung / Условное выходные напряжения / Tensión de salida convencional / Conventionele uitgangsspanning / Tensione di uscita convenzionale	U2	21.6 → 30 V	16 → 26.5 V	21.6 → 32 V	16 → 30 V	21.6 → 36 V	16 → 34 V
Facteur de marche à 40°C (10 min), Norme EN60974-1 / Duty cycle at 40°C (10 min), Standard EN60974-1.	Imax	30 %		30 %		35 %	
* Einschaltdauer @ 40°C (10 min), EN60974-1-Norm / Ciclo de trabajo a 40°C (10 min), Norma EN60974-1/ ПВ% при 40°C (10 мин), Норма EN60974-1. / Inschakelduur bij 40°C (10 min), Norm EN60974-1, Ciclo di lavoro a 40°C (10 min), Norma EN60974-1.	60 %	200 A		220 A	240 A	300 A	
	100 %	180 A		180 A	200 A	240 A	
Diamètre minimal et maximal du fil d'apport / Minimum and maximum diameter of filler wire / Minimaler und maximaler Durchmesser des Schweißfülldrahtes / Diámetro mínimo y máximo del hilo de soldadura / Минимальный и максимальный диаметр присадочной проволоки / Minimale en maximale diameter van het lasdraad / Diametro minimo e massimo del filo d'apporto	Acier / Steel	0.6 → 1.2 mm		0.6 → 1.2 mm		0.6 → 1.6 mm	
	Inox / Stainless	0.8 → 1.2 mm		0.8 → 1.2 mm		0.6 → 1.6 mm	
	Aluminium	0.8 → 1.0 mm		0.8 → 1.0 mm		0.8 → 1.6 mm	
	Fil fourré / Cored wire	09 → 1.2 mm		09 → 1.2 mm		09 → 1.2 mm	
Connectique de torche / Torch connector / Brenneranschluss / Conexiones de antorcha / Соединения горелки / Aansluiting toorts / Connettori della torcia		Euro					
Type de galet / Drive roller type / Drahtführungsrolle-Typ / Tipo de rodillo / Тип ролика / Type draadaanvoerrol / Tipo di rullo		A		B		B	
Vitesse de dévidage / Motor speed / Motor-Drehzahl / Velocidad de motor / Скорость двигателя / Snelheid motor / Velocità del motore		2 → 15 m/min		3 → 18 m/min		3 → 21 m/min	
Puissance du moteur / Motor power / Leistung des Motors / Potencia del motor / Vermogen van de motor / Potenza del motore		50 W		50 W		50 W	
Diamètre maximal de la bobine d'apport / Maximum diameter of the supply reel / Maximaler Durchmesser der Schweißfülldrahtspule / Diámetro máximo de la bobina de alambre / Максимальный диаметр проволочной бобины / Maximale diameter van de spoel / Diametro massimo della bobina d'apporto		Ø 300 mm					
Poids maximal de la bobine de fil d'apport / Maximum weight of the filler wire reel / Maximales Gewicht der Schweißfüll-drahtspule / Peso máximo de la bobina de alambre / Максимальный вес проволочной бобины / Maximale gewicht van de spoel / Peso massimo della bobina del filo d'apporto		15 kg					
Pression maximale de gaz / Maximum gas pressure / Maximaler Gasdruck / Presión máxima del gas / Максимальное давление газа / Maximale gasdruk / Pressione massima del gas	Pmax	0.5 MPa (5 bar)					
Température de fonctionnement / Functionning temperature / Betriebstemperatur / Temperatura de funcionamiento / Рабочая температура / Gebruikstemperatuur / Temperatura di funzionamento		-10°C → +40°C					

MULTIWELD 250T / 320T / FV 220M / 400T

Température de stockage / Storage temperature / Lagertemperatur / Temperatura de almacenaje / Температура хранения / Bewaartemperatuur / Temperatura di stoccaggio	-20°C ➔ +55°C		
Degré de protection / Protection level / Schutzart / Grado de protección / Степень защиты / Beschermingsklasse / Grado di protezione	IP21	IP21	IP21
Classe d'isolation minimale des enroulements / Minimum coil insulation class / Clase mínima de aislamiento del bobinado / Minimale isolatieklasse omwikkelingen / Classe minima di isolamento degli avvolgimenti / Minimalna klasa izolacji okablowania	B		
Dimensions (Lxlxh) / Dimensions (LxWxH) / Abmessungen (Lxbxt) / Dimensiones (Lxlxh) / Размеры (ДхШхВ) / Afmetingen (Lxlxh) / Dimensioni (Lxlxh)	77 x 79 x 47 cm		94 × 78 × 38.5 cm
Poids / Weight / Gewicht / Bec / Peso / Gewicht / Peso	40 kg	44 kg	63 kg

*Les facteurs de marche sont réalisés selon la norme EN60974-1 à 40°C et sur un cycle de 10 min. Lors d'utilisation intensive (supérieur au facteur de marche) la protection thermique peut s'enclencher, dans ce cas, l'arc s'éteint et le témoin s'allume. Laissez l'appareil alimenté pour permettre son refroidissement jusqu'à annulation de la protection. La source de courant décrit une caractéristique de sortie de type plate. Dans certains pays, U0 est appelé TCO.

*The duty cycles are measured according to standard EN60974-1 à 40°C and on a 10 min cycle. While under intensive use (> to duty cycle) the thermal protection can turn on, in that case, the arc swictes off and the indicator switches on. Keep the machine's power supply on to enable cooling until thermal protection cancellation. The current source describes a flat output characteristic. In some countries, U0 is called TCO.

* Einschaltdauer gemäß EN60974-1 (10 Minuten - 40°C). Bei sehr intensivem Gebrauch (>Einschaltdauer) kann der Thermoschutz ausgelöst werden. In diesem Fall wird der Lichtbogen abgeschaltet und die entsprechende Warnung erscheint auf der Anzeige. Das Gerät zum Abkühlen nicht ausschalten und laufen lassen bis das Gerät wieder bereit ist. Die Stromquelle beschreibt eine flache Ausgangscharakteristik. In einigen Ländern wird U0 als TCO bezeichnet.

*Los ciclos de trabajo están realizados en acuerdo con la norma EN60974-1 a 40ºC y sobre un ciclo de diez minutos. Durante un uso intensivo (superior al ciclo de trabajo), se puede activar la protección térmica. En este caso, el arco se apaga y el indicador se enciende. Deje el aparato conectado para permitir que se enfríe hasta que se anule la protección. La fuente de corriente describe una característica de salida plana. En algunos países, U0 se llama TCO.

*ПВ% указаны по норме EN60974-1 при 40°C и для 10-минутного цикла. При интенсивном использовании (> ПВ%) может включиться тепловая защита. В этом случае дуга погаснет и загорится индикатор . Оставьте аппарат подключенным к питанию, чтобы он остыл до полной отмены защиты. Источник тока имеет плоскую выходную характеристику. В некоторых странах U0 называется TCO.

*De inschakelduur is gemeten volgens de norm EN60974-1 bij een temperatuur van 40°C en bij een cyclus van 10 minuten. Bij intensief gebruik (superieur aan de inschakelduur) kan de thermische beveiliging zich in werking stellen. In dat geval gaat de boog uit en gaat het beveiligingslampje gaat branden. Laat het apparaat aan de netspanning staan om het te laten afkoelen, totdat de beveiliging afslaat. De stroombron heeft een vlakke uitgangskarakteristiek. In sommige landen wordt U0 TCO genoemd.

*I cicli di lavoro sono realizzati secondo la norma EN60974-1 a 40°C e su un ciclo di 10 min. Durante l'uso intensivo (> al ciclo di lavoro) la protezione termica può attivarsi, in questo caso, l'arco si spegne e la spia si illumina. Lasciate il dispositivo collegato per permetterne il raffreddamento fino all'annullamento della protezione. La sorgente di corrente descrive una caratteristica di uscita piatta. In alcuni Paesi, U0 viene chiamata TCO.

SPÉCIFICATIONS TECHNIQUES / TECHNICAL SPECIFICATIONS / TECHNISCHE DATEN / ESPECIFICACIONES TÉCNICAS / ТЕХНИЧЕСКИЕ СПЕЦИФИКАЦИИ / TECHNISCHE GEGEVENS / SPECIFICHE TECNICHE

		FV 220M			
Primaire / Primary / Primär / Primario / Первичка / Primaire / Primario					
Tension d'alimentation / Power supply voltage / Versorgungsspannung / Tensión de red eléctrica / Напряжение питания / Voedingsspanning / Tensione di alimentazione	U1	110 V +/- 15%		230 V +/- 15%	
Fréquence secteur / Mains frequency / Netzfrequenz / Frecuencia / Частота сети / Frequentie sector / Frequenza settore		50 / 60 Hz			
Nombre de phases / Number of phases / Anzahl der Phasen / Número de fases / Количество фаз / Aantal fasen / Numero di fase		1			
Fusible disjoncteur / Fuse / Sicherung / Fusible disyuntor / Плавкий предохранитель прерывателя / Zekering hoofdschakelaar / Fusibile disgiuntore		32 A		16 A	
Courant d'alimentation effectif maximal / Maximum effective supply current / Corriente de alimentación efectiva máxima / Maximale effectieve voedingsstroom / Corrente di alimentazione effettiva massima / Maksymalny efektywny prąd zasilania	I1eff	20.3 A			
Courant d'alimentation maximal / Maximum supply current / Corriente de alimentación máxima / Maximale voedingsstroom / Corrente di alimentazione massima / Maksymalny prąd zasilania	I1max	36.99 A			
Section du cordon secteur / Mains cable section / Sectie netsnoer / Sección del cable de alimentación / Sezione del cavo di alimentazione / Odcinek przewodu zasilającego		3 x 2.5 mm²			
Puissance active maximale consommée / Maximum active power consumed / Consumo máximo de energía activa / Maximale actieve verbruikte vermogen / Potenza attiva massima consumata / Maksymalny pobór mocy czynnej		7 020 W			
Consommation au ralenti / Idle consumption / Consumo en ralentizado / Stationair verbruik / Consumo al minimo / Zużycie na biegu jałowym		25.6 W			
Rendement à I2max / Efficiency at I2max / Eficiencia a I2máx / Rendement bij I2max / Efficienza a I2max / Sprawność przy I2max		82 %			
Facteur de puissance à I2max / Power factor at I2max / Factor de potencia a I2max / Inschakelduur bij I2max / Ciclo di potenza a I2max / Współczynnik mocy przy I2max	λ	0.99			
Classe CEM / EMC class / Classe CEM / Klasse CEM / Classe CEM / Klasa EMC		A			
Secondaire / Secondary / Sekundär / Secundario / Вторичка / Secondair / Secondario		MMA	MIG-MAG	MMA	MIG-MAG
Tension à vide / No load voltage / Leerlaufspannung / Tensión al vacío / Напряжение холостого хода / Nullastspanning / Tensione a vuoto	U0 (TCO)	67 V		75 V	
Nature du courant de soudage / Type of welding current / Tipo de corriente de soldadura / Type lasstroom / Tipo di corrente di saldatura / Rodzaj prądu spawania		DC			
Modes de soudage / Welding modes / Modos de soldadura / Lasmodules / Modalità di saldatura / Tryby spawania		MIG-MAG / MMA			
Courant de soudage minimal / Minimum welding current / Corriente mínima de soldadura / Minimale lasstroom / Corrente minima di saldatura / Minimalny prąd spawania		30 A			
Courant de sortie nominal / Rate current output / nominaler Arbeitsstrom / Corriente de salida nominal / Номинальный выходной ток / Nominale uitgangsstroom / Corrente di uscita nominale	I2	30 ➔ 120 A	30 ➔ 140 A	30 ➔ 200 A	30 ➔ 220 A
Tension de sortie conventionnelle / Conventional voltage output / entsprechende Arbeitsspannung / Условное выходные напряжения / Tensión de salida convencional / Conventionele uitgangsspanning / Tensione di uscita convenzionale	U2	21.2 ➔ 24.8 V	15.5 ➔ 21 V	21.2 ➔ 28 V	15.5 ➔ 25 V
* Facteur de marche à 40°C (10 min), Norme EN60974-1 / Duty cycle at 40°C (10 min), Standard EN60974-1. Einschaltdauer @ 40°C (10 min), EN60974-1-Norm / Ciclo de trabajo a 40°C (10 min), Norma EN60974-1/ ПВ% при 40°C (10 мин), Норма EN60974-1. / Inschakelduur bij 40°C (10 min), Norm EN60974-1, Ciclo di lavoro a 40°C (10 min), Norma EN60974-1.	Imax	30 %		20 %	
	60 %	100 A	110 A	140 A	160 A
	100 %	80 A	90 A	100 A	120 A
Diamètre minimal et maximal du fil d'apport / Minimum and maximum diameter of filler wire / Minimaler und maximaler Durchmesser des Schweißfülldrahtes / Diámetro mínimo y máximo del hilo de soldadura / Минимальный и максимальный диаметр присадочной проволоки / Minimale en maximale diameter van het lasdraad / Diametro minimo e massimo del filo d'apporto	Acier / Steel	0.6 ➔ 1.0 mm			
	Inox / Stainless	0.8 ➔ 1.0 mm			
	Aluminium	0.8 ➔ 1.0 mm			
	Fil fourré / Cored wire	09 ➔ 1.2 mm			
Connectique de torche / Torch connector / Brenneranschluss / Conexiones de antorcha / Соединения горелки / Aansluiting toorts / Connettori della torcia		Euro			
Type de galet / Drive roller type / Drahtführungsrolle-Typ / Tipo de rodillo / Тип ролика / Type draadaanvoerrol / Tipo di rullo		A			
Vitesse de dévidage / Motor speed / Motor-Drehzahl / Velocidad de motor / Скорость двигателя / Snelheid motor / Velocità del motore		2 ➔ 11 m/min		2 ➔ 15 m/min	
Puissance du moteur / Motor power / Leistung des Motors / Potencia del motor / Vermogen van de motor / Potenza del motore		50 W		50 W	
Diamètre maximal de la bobine d'apport / Maximum diameter of the supply reel / Maximaler Durchmesser der Schweißfülldrahtspule / Diámetro máximo de la bobina de alambre / Максимальный диаметр проволочной бобины / Maximale diameter van de spoel / Diametro massimo della bobina d'apporto		Ø 300 mm			
Poids maximal de la bobine de fil d'apport / Maximum weight of the filler wire reel / Maximales Gewicht der Schweißfülldrahtspule / Peso máximo de la bobina de alambre / Максимальный вес проволочной бобины / Maximale gewicht van de spoel / Peso massimo della bobina del filo d'apporto		15 kg			
Pression maximale de gaz / Maximum gas pressure / Maximaler Gasdruck / Presión máxima del gas / Максимальное давление газа / Maximale gasdruk / Pressione massima del gas	Pmax	0.5 MPa (5 bar)			
Température de fonctionnement / Functionning temperature / Betriebstemperatur / Temperatura de funcionamiento / Рабочая температура / Gebruikstemperatuur / Temperatura di funzionamento		-10°C ➔ +40°C			
Température de stockage / Storage temperature / Lagertemperatur / Temperatura de almacenaje / Температура хранения / Bewaartemperatuur / Temperatura di stoccaggio		-20°C ➔ +55°C			
Degré de protection / Protection level / Schutzart / Grado de protección / Степень защиты / Beschermingsklasse / Grado di protezione		IP23			
Classe d'isolation minimale des enroulements / Minimum coil insulation class / Clase mínima de aislamiento del bobinado / Minimale isolatieklasse omwikkelingen / Classe minima di isolamento degli avvolgimenti / Minimalna klasa izolacji okablowania		B			

MULTIWELD 250T / 320T / FV 220M / 400T

Dimensions (Lxlxh) / Dimensions (LxWxH) / Abmessungen (Lxbxt) / Dimensiones (Lxlxh) / Размеры (ДхШхВ) / Afmetingen (Lxlxh) / Dimensioni (Lxlxh)	77 x 79 x 47 cm
Poids / Weight / Gewicht / Bec / Peso / Gewicht / Peso	32 kg

*Les facteurs de marche sont réalisés selon la norme EN60974-1 à 40°C et sur un cycle de 10 min. Lors d'utilisation intensive (supérieur au facteur de marche) la protection thermique peut s'enclencher, dans ce cas, l'arc s'éteint et le témoin s'allume. Laissez l'appareil alimenté pour permettre son refroidissement jusqu'à annulation de la protection. La source de courant décrit une caractéristique de sortie de type plate. Dans certains pays, U0 est appelé TCO.

*The duty cycles are measured according to standard EN60974-1 à 40°C and on a 10 min cycle. While under intensive use (> to duty cycle) the thermal protection can turn on, in that case, the arc swictes off and the indicator switches on. Keep the machine's power supply on to enable cooling until thermal protection cancellation. The current source describes a flat output characteristic. In some countries, U0 is called TCO.

* Einschaltdauer gemäß EN60974-1 (10 Minuten - 40°C). Bei sehr intensivem Gebrauch (>Einschaltdauer) kann der Thermoschutz ausgelöst werden. In diesem Fall wird der Lichtbogen abgeschaltet und die entsprechende Warnung erscheint auf der Anzeige. Das Gerät zum Abkühlen nicht ausschalten und laufen lassen bis das Gerät wieder bereit ist. Die Stromquelle beschreibt eine flache Ausgangscharakteristik. In einigen Ländern wird U0 als TCO bezeichnet.

*Los ciclos de trabajo están realizados en acuerdo con la norma EN60974-1 a 40ºC y sobre un ciclo de diez minutos. Durante un uso intensivo (superior al ciclo de trabajo), se puede activar la protección térmica. En este caso, el arco se apaga y el indicador se enciende. Deje el aparato conectado para permitir que se enfríe hasta que se anule la protección. La fuente de corriente describe una característica de salida plana. En algunos países, U0 se llama TCO.

*ПВ% указаны по норме EN60974-1 при 40°C и для 10-минутного цикла. При интенсивном использовании (> ПВ%) может включиться тепловая защита. В этом случае дуга погаснет и загорится индикатор . Оставьте аппарат подключенным к питанию, чтобы он остыл до полной отмены защиты. Источник тока имеет плоскую выходную характеристику. В некоторых странах U0 называется TCO.

*De inschakelduur is gemeten volgens de norm EN60974-1 bij een temperatuur van 40°C en bij een cyclus van 10 minuten. Bij intensief gebruik (superieur aan de inschakelduur) kan de thermische beveiliging zich in werking stellen. In dat geval gaat de boog uit en gaat het beveiligingslampje gaat branden. Laat het apparaat aan de netspanning staan om het te laten afkoelen, totdat de beveiliging afslaat. De stroombron heeft een vlakke uitgangskarakteristiek. In sommige landen wordt U0 TCO genoemd.

*I cicli di lavoro sono realizzati secondo la norma EN60974-1 a 40°C e su un ciclo di 10 min. Durante l'uso intensivo (> al ciclo di lavoro) la protezione termica può attivarsi, in questo caso, l'arco si spegne e la spia si illumina. Lasciate il dispositivo collegato per permetterne il raffreddamento fino all'annullamento della protezione. La sorgente di corrente descrive una caratteristica di uscita piatta. In alcuni Paesi, U0 viene chiamata TCO.

ICÔNES / SYMBOLS / ZEICHENERKLÄRUNG / SÍMBOLOS / СИМВОЛЫ / PICTOGRAMMEN / ICONE

	FR Attention ! Lire le manuel d'instruction avant utilisation. EN Warning ! Read the user manual before use. DE ACHTUNG ! Lesen Sie diese Anleitung sorgfältig durch vor Inbetriebnahme des Geräts. ES ¡Atención! Lea el manual de instrucciones antes de su uso. RU Внимание! Прочтите инструкцию перед использованием. NL Let op! Lees aandachtig de handleiding. IT Attenzione! Leggere il manuale d'istruzioni prima dell'uso. PT Atenção! Ler o manual de instruções antes de usar. PL Uwaga! Przed użyciem należy uważnie przeczytać instrukcję obsługi.
3~	FR Source de courant de technologie onduleur délivrant un courant continu. EN Undulating current technology based source delivering direct curent. DE Invertergleichstromquelle. ES Fuente de corriente de tecnología ondulador que libera corriente continua. RU Источник тока с технологией преобразователя, выдающий постоянный ток. NL Stroombron met UPS technologie, levert gelijkstroom. IT Fonte di corrente con tecnologia inverter che rilascia una corrente continua. PT Fonte de energia da tecnologia do inversor que fornece uma corrente contínua. PL Źródło prądu technologii falownika dostarczającego prąd stały.
1~	FR Source de courant de technologie onduleur délivrant un courant continu. EN Undulating current technology based source delivering direct curent. DE Invertergleichstromquelle. ES Fuente de corriente de tecnología ondulador que libera corriente continua. RU Источник тока с технологией преобразователя, выдающий постоянный ток. NL Stroombron met UPS technologie, levert gelijkstroom. IT Fonte di corrente con tecnologia inverter che rilascia una corrente continua. PT Fonte de energia da tecnologia do inversor que fornece uma corrente contínua. PL Źródło prądu technologii falownika dostarczającego prąd stały.
IEC 60974-1 IEC 60974-10 Class A	FR L'appareil respecte la norme EN60974-1 et EN60971-10 appareil de classe A. EN The device is compliant with standard EN60974-1 and EN60971-10 class A device. DE Das Gerät erfüllt die Norm EN 60974-1 und EN 60971-10 der Geräteklasse A ES El aparato se ajusta a la norma EN60974-1 y EN 60971-10, aparato de clase A. RU Аппарат соответствует нормам EN60974-1 и EN60971-10 аппарат класса A. NL Dit klasse A apparaat voldoet aan de EN60974-1 en EN60971-10 normen. IT Il dispositivo rispetta la norma EN60974-1 e EN 60971-10 dispositivo classe A. PT O dispositivo está em conformidade com os dispositivos EN60974-1 e EN60971-10 classe A. PL Urządzenie jest zgodne z normami EN60974-1 i EN60971-10 dla urządzeń klasy A.
IEC 60974-5	FR L'appareil respecte la norme EN 60974-5. EN This product is compliant with standard EN 60974-5. DE Das Gerät entspricht der Norm EN 60974-5. ES El aparato es conforme a las normas EN60974-5. RU Аппарат соблюдает нормы EN 60974-5. NL Het apparaat voldoet aan de norm EN 60974-5. IT Il dispositivo rispetta la norma EN 60974-5. PT O dispositivo está em conformidade com a norma EN 60974-5. PL Urządzenie spełnia wymagania normy EN 60974-5.
	FR Soudage à l'électrode enrobée - MMA (Manual Metal Arc) EN MMA welding (Manual Metal Arc) DE Schweißen mit umhüllter Elektrode (E-Handschweißen) ES Soldadura con electrodo revestido (MMA - Manual Metal Arc) RU Сварка электродом с обмазкой: MMA (Manual Metal Arc) NL Lassen met beklede elektrode - MMA (Manual Metal Arc) IT Saldatura all'elettrodo rivestito - MMA (Manual Metal Arc) PT Soldadura a eletrodo revestido (MMA – Manual Metal Arc) PL Spawanie elektrodami otulonymi (MMA - Manual Metal Arc)
	FR Soudage à MIG / MAG EN MIG / MAG welding DE MIG / MAG-Schweißen ES Soldadura MIG / MAG RU Сварка MIG / MAG NL MIG/ MAG lassen IT Saldatura MIG / MAG PT Soldagem MIG / MAG PL Spawanie MIG / MAG
S	FR Convient au soudage dans un environnement avec risque accru de choc électrique. La source de courant elle-même ne doit toutefois pas être placée dans de tels locaux. EN Suitable for welding in an environment with an increased risk of electric shock. However this a machine should not placed in such an environment. DE Geeignet für Schweißarbeiten im Bereich mit erhöhten elektrischen Risiken. ES Adaptado para soldadura en lugar con riesgo de choque eléctrico. Sin embargo, la fuente eléctrica no debe estar presente en dichos lugares. RU Подходит для сварки в среде с повышенным риском удара током. В этом случае источник тока не должен находиться в том же самом помещении. NL Geschikt voor het lassen in een ruimte met verhoogd risico op elektrische schokken. De voedingsbron zelf moet echter niet in dergelijke ruimte worden geplaatst. IT Conviene alla saldatura in un ambiente a grande rischio di scosse elettriche. L'origine della corrente non deve essere localizzata in tale posto. PT Adequado para soldadura em um ambiente com maior risco de choque elétrico. A fonte de energia em si, no entanto, não deve ser colocada em tais premissas. PL Nadaje się do spawania w środowisku o zwiększonym ryzyku porażenia prądem. Samo źródło prądu nie może jednak być umieszczone w tego typu pomieszczeniach.
IP21	FR Protégé contre l'accès aux parties dangereuses des corps solides de diam>12,5mm (équivalent doigt de la main) et contre les chutes verticales de gouttes d'eau. EN Protected against access to dangerous parts of solid bodies with a diameter >12.5mm (equivalent to the finger of the hand) and against vertical drops of water. DE Schutz vor Eindringen von festen Fremdkörpern (Durchmesser >12,5mm = Finger einer Hand). Schutz gegen Berühren mit einem Finger und senkrecht fallendes Tropfwasser. ES Protegido contra el acceso a partes peligrosas de cuerpos sólidos de diámetro > 12,5mm (equivalente al dedo de la mano) y contra gotas verticales de agua. RU Защищен против доступа твердых тел диаметром > 12,5 мм (размером с палец руки) в опасные места. Защищен против доступа пальцев в опасные места и против вертикального попадания капель воды. NL Beschermd tegen de toegang tot gevaarlijke delen van vaste lichamen met een diameter >12,5 mm (gelijk aan de vinger van de hand) en tegen verticale waterdruppels. IT Protetto contro l'accesso a parti pericolose di corpi solidi di diam>12,5mm (equivalente al dito della mano) e contro le gocce d'acqua verticali. PT Protegido contra o acesso a partes perigosas de corpos sólidos de diam>12,5mm (equivalente ao dedo da mão) e contra gotas verticais de água. PL Zabezpieczone przed dostępem do niebezpiecznych części ciał stałych o średnicy>12,5mm (odpowiednik palca ręki) oraz przed pionowymi kroplami wody.
IP23	FR Protégé contre l'accès aux parties dangereuses des corps solides de diam >12.5 mm et protégé contre la pluie dirigée à 60° par rapport à la verticale. EN Protected against access to dangerous parts of solid bodies with diam >12.5 mm and protected against rain directed at 60° to the vertical DE Schutz gegen den Zugang zu gefährlichen Teilen von Feststoffen mit einem Durchmesser >12,5 mm und Schutz gegen Regen, der auf 60° aus der Vertikalen gerichtet ist ES Protección contra el acceso a partes peligrosas de sólidos con un diámetro >12,5 mm y protección contra la lluvia dirigida a 60° de la vertical. RU Защита от доступа к опасным частям твердых частиц диаметром >12,5 мм и защита от дождя, направленного на 60° от вертикали. NL Bescherming tegen toegang tot gevaarlijke delen van vaste stoffen met een diameter >12,5 mm en bescherming tegen regen op 60° van de verticaal. IT Protezione contro l'accesso a parti pericolose di solidi con diametro >12,5 mm e protezione contro la pioggia diretta a 60° dalla verticale. PT Protecção contra o acesso a partes perigosas de corpos sólidos com diamante >12,5 mm e, protecção contra a chuva dirigida a 60° a partir da vertical. PL Ochrona przed dostępem do niebezpiecznych części ciał stałych o średnicy >12,5 mm oraz, ochrona przed deszczem skierowanym pod kątem 60° od pionu.
	FR Courant de soudage continu EN Direct welding current DE Gleichschweißstrom ES Corriente de soldadura continua. RU Постоянный сварочный ток NL Gelijkstroom IT Corrente di saldatura continuo PT Corrente de soldadura contínua PL Stały prąd spawania
U0	FR Tension assignée à vide EN Open circuit voltage DE Leerlaufspannung ES Tensión asignada en vacío RU Номинальное напряжение холостого хода NL Nullastspanning IT Tensione nominale a vuoto PT Tensão sem carga PL Znamionowe napięcie próżniowe
X(40°C)	FR Facteur de marche selon la norme EN60974-1 (10 minutes – 40°C). EN Duty cycle according to standard EN 60974-1 (10 minutes – 40°C). DE Einschaltdauer: 10 min - 40°C, richtlinienkonform EN60974-1. ES Ciclo de trabajo según la norma EN60974-1 (10 minutos – 40°C). RU ПВ% согласно норме EN 60974-1 (10 минут – 40°C). NL Inschakelduur volgens de norm EN60974-1 (10 minuten – 40°C). IT Ciclo di lavoro conforme alla norma EN60974-1 (10 minuti – 40°C). PT Ciclo de trabalho de acordo com a norma EN60974-1 (10 minutos – 40°C). PL Cykl pracy zgodny z normą EN60974-1 (10 minut - 40 ° C)
I2	FR Courant de soudage conventionnel correspondant EN Corresponding conventional welding current DE Entsprechender Schweißstrom ES Corriente de soldadura convencional correspondiente. RU Соответствующий номинальный сварочный ток NL Corresponderende conventionele lasstroom IT Corrente di saldatura convenzionale PT Corrente de soldadura convencional correspondente PL Odpowiedni konwencjonalny prąd spawania
A	FR Ampères EN Amperes DE Ampere ES Amperios RU Амперы NL Ampère IT Amper PT Ampères PL Ampery
U2	FR Tensions conventionnelles en charges correspondantes EN Conventional voltage in corresponding loads. DE Entsprechende Arbeitsspannung ES Tensiones convencionales en cargas correspondientes. RU Номинальные напряжения при соответствующих нагрузках. NL Conventionele spanning in corresponderende belasting IT Tensioni convenzionali in cariche corrispondenti PT Tensões convencionais em cargas correspondentes PL Napięcia konwencjonalne przy odpowiednich obciążeniach
V	FR Volt EN Volt DE Volt ES Voltio RU Вольт NL Volt IT Volt PT Volt PL Wolt DA Volt SW Volt NO Volt FI Voltti HU Volt CZ Volt JP ボルト CN 伏 GR Volt RO Volti
Hz	FR Hertz EN Hertz DE Hertz ES Hercios RU Герц NL Hertz IT Hertz PT Hertz PL Herc DA Hertz SW Hertz NO Hertz FI Hertsi HU Hertz CZ Hertz JP ヘルツ CN 赫兹 GR Hertz RO Hertzi
3~ 50/60 Hz	FR Alimentation électrique triphasée 50 ou 60Hz EN Three-phase power supply 50 or 60Hz DE Dreiphasige Netzversorgung mit 50 oder 60Hz ES Alimentación eléctrica trifásica 50 o 60Hz RU Трехфазное электропитание 50 или 60Гц NL Driefasen elektrische voeding 50Hz of 60Hz. IT Alimentazione elettrica trifase 50 o 60Hz PT Fonte de alimentação trifásica de 50 ou 60Hza PL Trójfazowe zasilanie elektryczne 50 lub 60Hz

MULTIWELD 250T / 320T / FV 220M / 400T

1~ 50/60 Hz	FR Alimentation électrique monophasée 50 ou 60Hz EN Single phase power supply 50 or 60 Hz DE Einphasige Netzversorgung mit 50 oder 60Hz ES Alimentación eléctrica monofásica 50 o 60Hz RU Однофазное электропитание 50 или 60Гц NL Enkelfase elektrische voeding 50Hz of 60Hz. IT Alimentazione elettrica monofase 50 o 60Hz PT Alimentação monofásica 50/60Hz PL Zasilanie jednofazowe 50 lub 60Hz
U1	FR Tension assignée d'alimentation EN Assigned voltage DE Netzspannung ES Tensión asignada de alimentación eléctrica. RU Номинальное напряжение питания NL Nominale voedingsspanning IT Tensione nominale d'alimentazione PT Tensão de alimentação PL Napięcie znamionowe zasilania
I1max	FR Courant d'alimentation assigné maximal (valeur efficace) EN Maximum rated power supply current (effective value). DE Maximaler Versorgungsstrom ES Corriente de alimentación eléctrica asignada máxima (valor eficaz). RU Максимальный сетевой ток (эффективное значение) NL Maximale nominale voedingsstroom (effectieve waarde) IT Corrente d'alimentazione nominale massima (valore effettivo) PT Corrente de alimentação nominal máxima de alimentação (valor eficaz) PL Maksymalny prąd znamionowy zasilania (wartość skuteczna).
I1eff	FR Courant d'alimentation effectif maximal EN Maximum effective power supply current. DE Maximaler effektiver Versorgungsstrom ES Corriente de alimentación eléctrica máxima. RU Максимальный эффективный сетевой ток NL Maximale effectieve voedingsstroom IT Corrente effettivo massimo di alimentazione PT Corrente de alimentação efetivo máxima PL Maksymalny skuteczny prąd zasilania
CE	FR Matériel conforme aux Directives européennes. La déclaration UE de conformité est disponible sur notre site (voir à la page de couverture). EN Device complies with europeans directives, The EU declaration of conformity is available on our website (see cover page). DE Gerät entspricht europäischen Richtlinien. Die Konformitätserklärung finden Sie auf unsere Webseite. ES Aparato conforme a las directivas europeas. La declaración de conformidad UE está disponible en nuestra página web (dirección en la portada). RU Устройство соответствует директивам Евросоюза. Декларация о соответствии доступна для просмотра на нашем сайте (ссылка на обложке). NL Apparaat in overeenstemming met de Europese richtlijnen. De verklaring van overeenstemming is te downloaden op onze website (adres vermeld op de omslag). IT Materiale in conformità alle Direttive europee. La dichiarazione di conformità è disponibile sul nostro sito (vedere sulla copertina). PT Aparelho conforme às diretivas européias A declaração de conformidade da UE está disponível no nosso site (ver capa). PL Urzadzenie jest zgodne z dyrektywami europejskimi. Deklaracja Zgodności UE jest dostępna na naszej stronie internetowej (patrz strona tytułowa).
EAC	FR Marque de conformité EAC (Communauté économique Eurasienne) EN EAEC Conformity marking (Eurasian Economic Community). DE EAC-Konformitätszeichen (Eurasische Wirtschaftsgemeinschaft) ES Marca de conformidad EAC (Comunidad económica euroasiática). RU Знак соответствия EAC (Евразийское экономическое сообщество) NL EAC (Euraziatische Economische Gemeenschap) merkteken van overeenstemming IT Marca di conformità EAC (Comunità Economica Eurasiatica) PT Marca de conformidade EAC (Comunidade Econômica da Eurásia) PL Znak zgodności EAC (Euroazjatyckiej wspólnoty Gospodarczej)
UK CA	FR Matériel conforme aux exigences britanniques. La déclaration de conformité britannique est disponible sur notre site (voir à la page de couverture). EN Equipment in compliance with British requirements. The British Declaration of Conformity is available on our website (see home page). DE Das Gerät entspricht den britischen Richtlinien und Normen. Die Konformitätserklärung für Grossbritannien ist auf unserer Internetseite verfügbar (siehe Titelseite). ES Equipo conforme a los requisitos británicos. La Declaración de Conformidad Británica está disponible en nuestra página web (véase la portada). RU Материал соответствует требованиям Великобритании. Заявление о соответствии для Великобритании доступно на нашем веб-сайте (см. главную страницу) NL Materiaal conform aan de Britse eisen. De Britse verklaring van overeenkomt is beschikbaar op onze website (zie omslagpagina). IT Materiale conforme alla esigenze britanniche. La dichiarazione di conformità britannica è disponibile sul nostro sito (vedere pagina di copertina). PT O equipamento atende às exigências britânicas. A Declaração de Conformidade do Reino Unido está disponível em nosso site (ver página de capa). PL Wyposażenie spełnia wymogi brytyjskie. Brytyjska Deklaracja Zgodności jest dostępna na naszej stronie internetowej (patrz strona tytułowa).
	FR Entrée de gaz EN Gas input DE Gaseingang ES Entrada de gas RU Подача газа NL Ingang gas IT Entrata di gas PT Entrada gás PL Wlot gazu
	FR Ce matériel faisant l'objet d'une collecte sélective selon la directive européenne 2012/19/UE. Ne pas jeter dans une poubelle domestique ! EN This hardware is subject to waste collection according to the European directives 2012/19/EU. Do not throw out in a domestic bin ! DE Für die Entsorgung Ihres Gerätes gelten besondere Bestimmungen (sondermüll) gemäß europäische Bestimmung 2012/19/EU. Es darf nicht mit dem Hausmüll entsorgt werden! ES Este material requiere una recogida de basuras selectiva según la directiva europea 2012/19/UE. ¡No tirar este producto a la basura doméstica! RU Это оборудование подлежит переработке согласно директиве Евросоюза 2012/19/UE. Не выбрасывать в общий мусоросборник! NL Afzonderlijke inzameling vereist volgens de Europese richtlijn 2012/19/UE. Gooi het apparaat niet bij het huishoudelijk afval ! IT Questo materiale è soggetto alla raccolta differenziata seguendo la direttiva europea 2012/19/UE. Non smaltire coni rifiuti domestici! PT Este produto está sujeito à coleta seletiva de acordo com a diretiva europeia 2012/19 / UE. Não jogar no lixo doméstico. PL Urządzenie to podlega selektywnej zbiórce odpadów zgodnie z dyrektywą UE 2012/19/UE. Nie wyrzucać do zwyklego kosza!
	FR Produit recyclable qui relève d'une consigne de tri. EN This product should be recycled appropriately DE Recyclingprodukt, das gesondert entsorgt werden muss. ES Producto reciclable que requiere una separación determinada. RU Этот аппарат подлежит утилизации. NL Product recyclebaar, niet bij het huishoudelijk afval gooien IT Prodotto riciclabile soggetto a raccolta differenziata. PT Produto reciclável que se enquadra em uma ordem de classificação. PL Produkt nadaje się do recyklingu zgodnie z instrukcjami sortowni.
	FR Matériel conforme aux normes Marocaines. La déclaration C_P (CMIM) de conformité est disponible sur notre site (voir à la page de couverture). EN Equipment in conformity with Moroccan standards. The declaration C_P (CMIM) of conformity is available on our website (see cover page). DE Das Gerät entspricht die marokkanischen Standards. Die Konformitätserklärung C_P (CMIM) ist auf unserer Webseite verfügbar (siehe Titelseite). ES Equipamiento conforme a las normas marroquíes. La declaración de conformidad C_P (CMIM) está disponible en nuestra página web (ver página de portada). RU Товар соответствует нормам Марокко. Декларация C_P (CMIM) доступна для скачивания на нашем сайте (см на титульной странице). NL Dit materiaal voldoet aan de Marokkaanse normen. De verklaring C_P (CMIM) van overeenstemming is beschikbaar op onze internet site (vermeld op de omslag). IT Materiale conforme alle normative marocchine. La dichiarazione C_P (CMIM) di conformità è disponibile sul nostro sito (vedi scheda del prodotto). PT Equipamento em conformidade com as normas marroquinas. A declaração de conformidade C_P (CMIM) está disponível no nosso site (ver página de rosto). PL Urządzenie zgodne ze standardami marokańskimi . Deklaracja zgodności C_P (CMIM) jest dostępna na naszej stronie internetowej (patrz strona tytułowa).
	FR Information sur la température (protection thermique) EN Temperature information (thermal protection) DE Information zur Temperatur (Thermoschutz) ES Información sobre la temperatura (protección térmica) RU Информация по температуре (термозащита). NL Informatie over de temperatuur (thermische beveiliging) IT Informazione sulla temperatura (protezione termiche) PT Informação de temperatura (proteção térmica) PL Informacja o temperaturze (ochrona termiczna)
	FR Vitesse du fil EN Wire speed DE Drahtgeschwindigkeit ES Velocidad de hilo RU Скорость проволоки NL Draadsnelheid IT Velocità di filo PT Velocidade de fio PL Prędkość drutu DA Trådhastighed SW Trådhastighet NO Ledningshastighet FI Langan nopeus HU Forgási sebesség CZ Rychlost podávání drátu JP ワイヤー速度 CN 线速 GR Ταχύτητα ρεύματος RO Viteza firului
	FR Purge gaz EN Gas purge DE Gasventil einschalten ES Epurazione del gas RU Продувка взором NL Afvoeren gas IT Gas di lavaggio PT Purga de gás PL Płukanie gazem

GYS
1, rue de la Croix des Landes
CS 54159
53941 SAINT-BERTHEVIN Cedex
France