NÁVOD K OBSLUZE / SVAŘOVACÍ STROJ CZ

NÁVOD NA OBSLUHU / ZVÁRACÍ STROJ SK

USER MANUAL / WELDING MACHINE EN

BEDIENUNGSANLEITUNG / SCHWEIßGERÄTE DE

INSTRUKCJA OBSŁUGI / URZĄDZENIE SPAWALNICZE PL

150/170/190
150/170/190-TIG LA

MADE IN EU CE

ENGLISH

CONTENT

Introduction

Dear Customer, Thank you for your trust and the purchase of our product.

Before starting up, please read all the instructions in this manual carefully to let you know about this device.

It is also necessary to read all the safety regulations in the enclosed document „Safety instructions and maintenance“.

For the most optimal and long-term use, you must follow the instructions for use and maintenance listed here. In your interest, we recommend that you entrust maintenance and repairs to our service organization, which has the appropriate equipment and specially trained staff. All of our machines and equipment are subject to long--term development. Therefore, we reserve the right to change during production.

Description

Machines 150 RS / TIG LA RS to 190 RS / TIG LA RS are professional welding inverters designed for MMA welding (welded electrodes) and TIG welding with contact start. So they are sources of welding current with a steep characteristic. Inverters are designed as portable sources of welding current. Machines are fitted with a strap and handle for easy handling and easy carrying. Welding inverters are constructed using a high-frequency transformer with a ferrit core, transistors, digital control and SMD technology. Machines are primarily designed for production, maintenance or assembly.

Machine controls

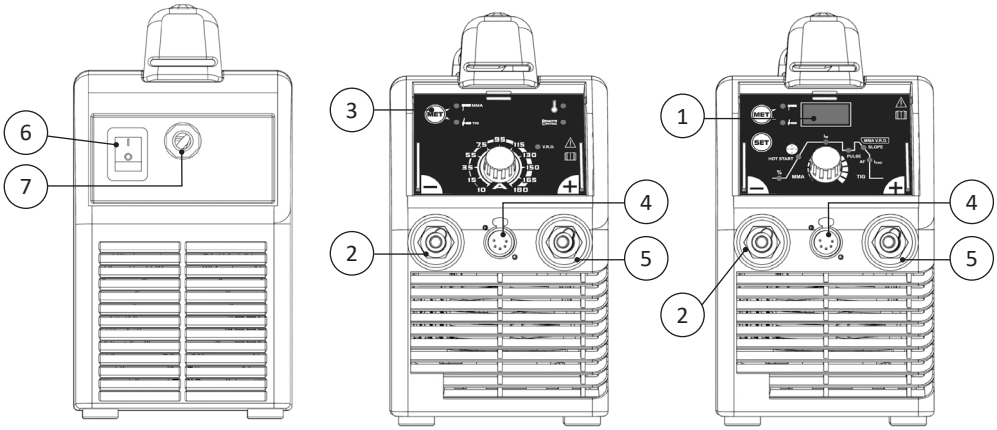

Pisition 1	Digital control panel
Pisition 2	Quickcoupling minus pole
Pisition 3	Analogue control panel
Pisition 4	Connector for remote control connection
Pisition 5	Quickcoupling plus pole
Pisition 6	Main switch
Pisition 7	Power supply cable

Technical parameters		150 RS 150 TIG LA RS	170 RS 170 TIG LA RS	190 RS 190 TIG LA RS
Input voltage 50/60 Hz	[V]	1 × 230 (±15 %)	1 × 230 (±15 %)	1 × 230 (±15 %)
Fuse – slow	[A]	16	20	20
Welding current range	[A]	10 - 150	10 - 170	10 - 180
Duty cycle 100 % (40 °C)	[A]	130	130	130
Duty cycle 60 % (40 °C)	[A]	-	170	170
Duty cycle max. I (40 °C)	[%]	65	60	50
Mains current / input 65 %	[A/kVA]	32/7,36	36/8,28	36/8,28
Voltage at no load	[V]	83	83	83
Protection	-	IP 23 S	IP 23 S	IP 23 S
Dimensions	[mm]	373x149x283	373x149x283	373x149x283
Weight	[kg]	7,9	7,9	7,9

Content of the package

1x Machine
1x Strap
2x Handle holder
1x Handle
2x Self-tapping screw
(DIN 7982C 4,2x22)

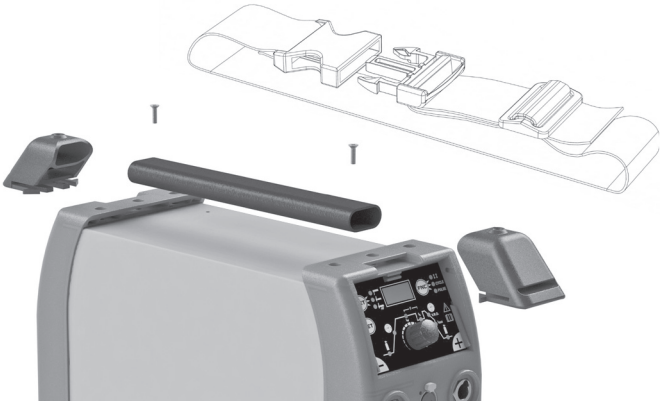

Expandable accessories

1. Plexiglas side cover
2. Plexiglas hinged cover

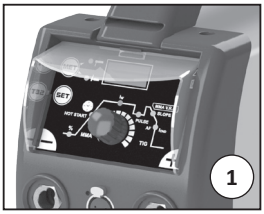

Mounting of the handle of the machine

1. Slide the handle holder into the hole on the front panel.
2. Insert the handle into the mounting bracket.
3. Slide the handle holder into the hole on the rear panel and handle.
4. Fix the handles and handles with the supplied screws. Screw holes are already pre-drilled.

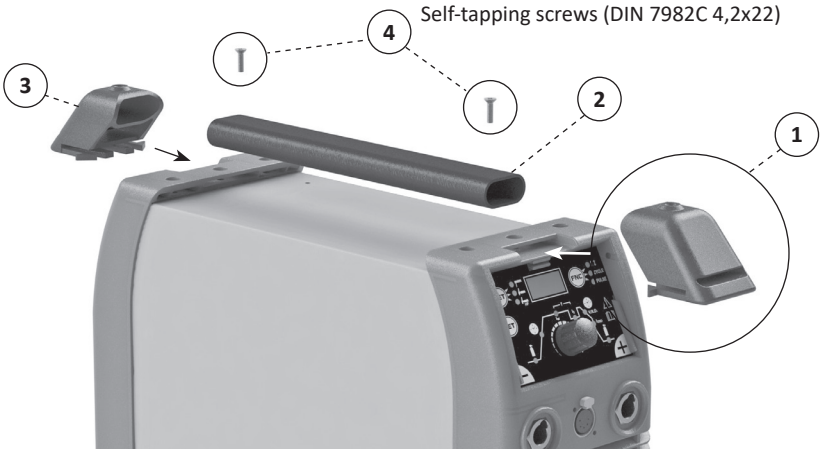

The handle must always be fixed with bolts. If the handle is not fixed by the screws, it can not be used to carry the machine!

Attaching the machine strap

1. Thread the strap through the opening of the rear face or the handle holder.
2. Guide the strap through the opening of the front panel or the handle holder.
3. Thread the strap with the buckle upwards.
4. Guide the strap through the buckle downward.
5. Thread the harness strap upwards.
6. Thread the carabiner strap downwards.
7. Thread the strap with the buckle upwards.
8. Strain the strap with the buckle downwards.
9. Connect the carbines.

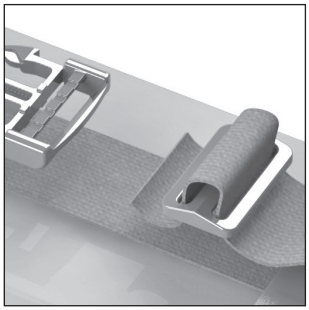

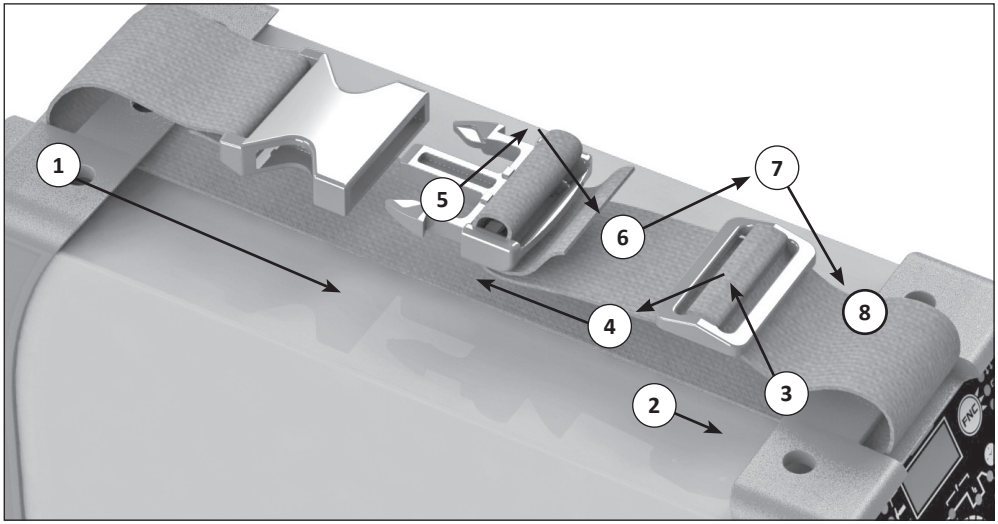

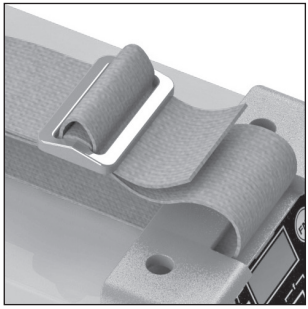

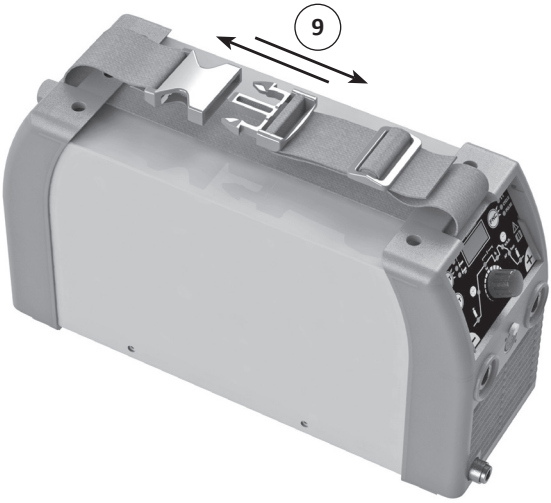

Installation must be carried out according to the above procedure. If the strap is installed in another way, it can not be used to carry the machine!

Overview of features and their parameters

MMA - 150, 170, 190 RS

SOFT START	%	NO
HOT START	%	Can´t be regulated, preset 30 %
Duration SOFT/HOT START	[s]	Can´t be regulated, preset 0,5 s
ARC FORCE	%	Can´t be regulated, preset 50 %
ANTI STICK	-	YES
V.R.D	-	YES
Remote control	-	UP/DOWN; 10k Potentiometer
Cooling unit	-	NO
Generator	-	YES (min. 5,5 kVA)

MMA - 150, 170, 190 TIG LA RS

SOFT START	%	-50 – 0
HOT START	%	0 – 100
Duration SOFT/HOT START	[s]	0 – 2,0
ARC FORCE	%	50/100
ANTI STICK	-	ON/OFF
V.R.D	-	ON/OFF
Remote control	-	UP/DOWN; 10k Potentiometer
Cooling unit	-	NO
Generator	-	YES (min. 5,5 kVA)

TIG LA - 150, 170, 190 TIG LA RS

PRE GAS	[s]	NO
UP SLOPE (smooth start)	[s]	NO
DOWN SLOPE (smooth completion)	[s]	0 – 10,0
END CURRENT	[A]	min. 10 – max. welding
POST GAS	[s]	NO
I_2 – low current	[A]	Can´t be regulated, preset 60 % curent I_w
PULSE FREQUENCY	[Hz]	0 – 500
DUTY CYCLE	%	Can´t be regulated, preset 50 %.
2-STROKE, 4-STROKE	-	NO
CYCLE	-	NO
Remote control	-	UP/DOWN; 10k Potentiometer
Cooling unit	-	YES (additional device)
Generator	-	YES (min. 6 kVA)

Description of the control panel

Analogue version

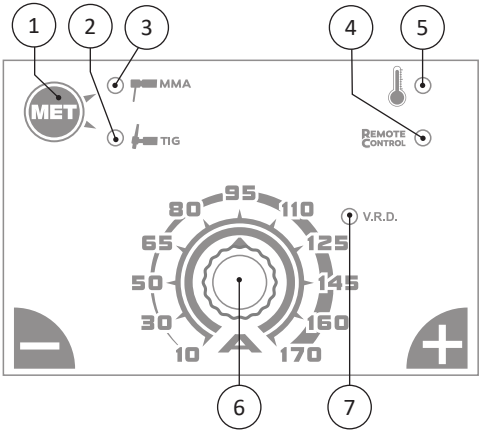

Position 1	Use the MET button to select a single welding method
Position 2	TIG method with touch control LA
Position 3	MMA method
Position 4	Remote control connection signaling
Position 5	Thermal protection signaling
Position 6	Control potentiometer - Machine power setting
Position 7	Signaling of V.R.D. (MMA only)

Digital version of TIG LA

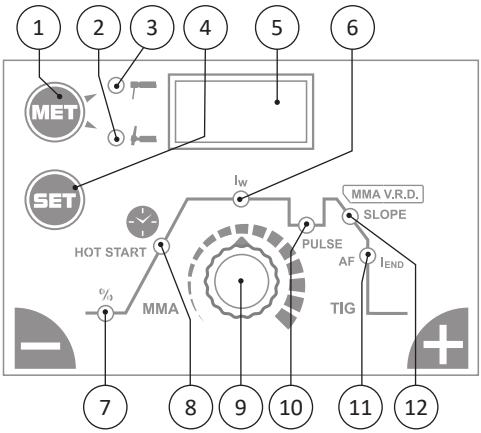

Position 1	Use the MET button to select the welding method
Position 2	TIG method with touch control LA
Position 3	MMA Method
Position 4	Use the SET button to select individual functions
Position 5	The display shows the function value and the set welding current
Position 6	Welding current
Position 7	HOT START; SOFT START
Position 8	Duration of HOT START a SOFT START (MMA only)
Position 9	Control n-coder for setting values
Position 10	Activating PULS; setting the function FREQUENCY PULSE
Position 11	End Current
Position 12	DOWN SLOPE - slow down current V.R.D. (MMA only)

Welding settings

Use the MET control button to select a welding method. Pressing the button repeatedly switches welding methods.

MMA

This method is intended for welding with coated electrode of CrNi, Al and alloy steel materials.

Analogue RS version

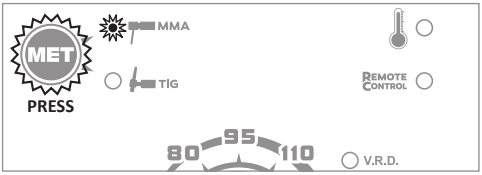

Digital TIG LA RS

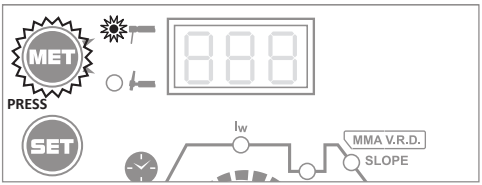

TIG

This method is designed for welding CrNi and steel materials with DC current. It also allows soldering of materials.

Analogue RS

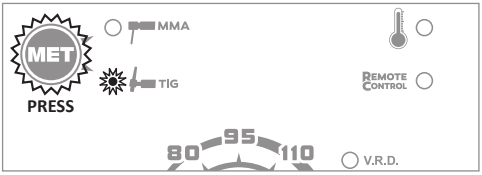

Digital TIG LA RS

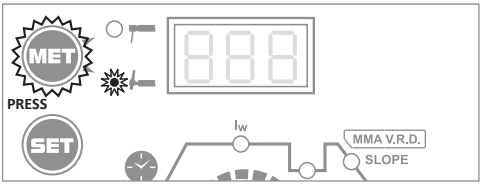

MMA method

Welding Current Settings - Digital TIG LA RS

The welding current setting is done using the encoder. The main welding current is set to I_w. The basic machine position is always in the I_w position. When you finish setting the other functions of the method, it automatically switches to the default position automatically.

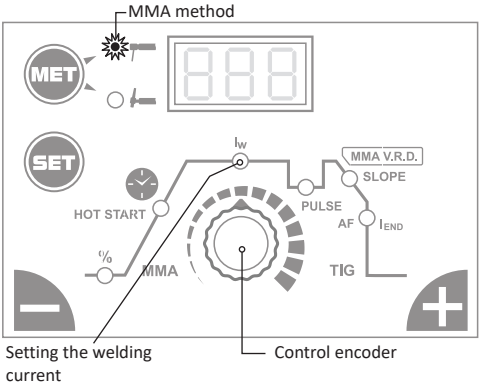

Welding Current Settings - Analogue RS

Setting the welding current is done with the control potentiometer. The performance scale shows the approximate value of the set current

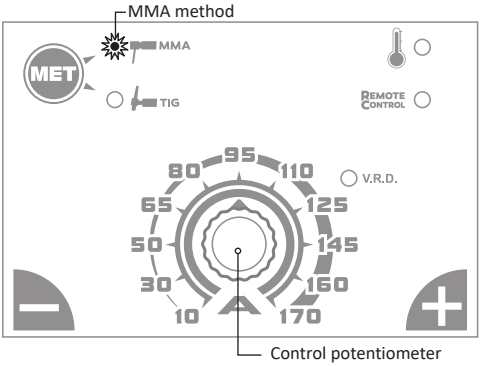

Analogue machines 150, 170 and 190 do not have the capability of correcting functions of each function. The factory values and equipment settings are listed in „OVERVIEW OF FUNCTIONS AND THEIR PARAMETERS“. The machine enables activation / deactivation of the V.R.D. (see „SETTING THE V.R.D. FUNCTION“) and HOT START (see „SETTING THE HOT START FUNCTION“).

Setting the SOFT START function

The function allows the setting of a smooth flow to the welding current. The function value determines the ignition current. Suitable for use in weak materials, for example, and to reduce the initial load of the circuit breaker. The required run-up time must be set to correct operation. If the duration is 0, the function is inactive.

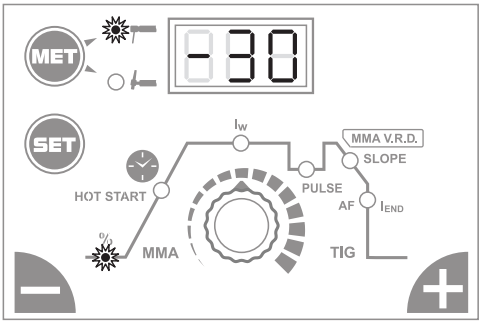

Setting the SOFT START TIME function (duration)

The function allows you to set the flow time for the welding current.

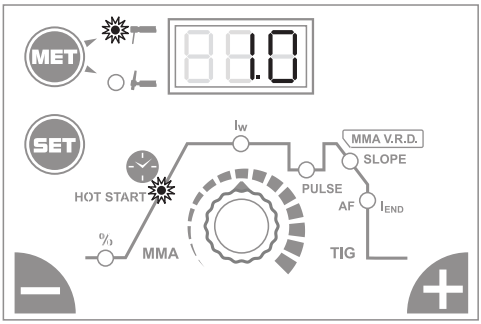

Setting up HOT START (easier ignition)

The function allows setting the welding current increment value when the welding arc is ignited. The function facilitates the ignition of the welding arc. The required duration must be set to the correct operation. If the duration is 0, the function is inactive.

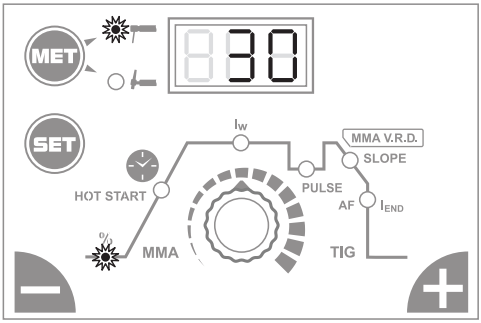

Setting the SOFT START TIME function (duration)

The function allows you to set the flow time for the welding current.

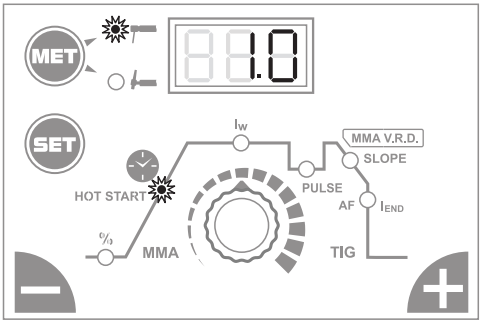

Activate / deactivate the function HOT START - Analogue RS

The function is automatically active in the MMA method. Switching to the TIG method will deactivate the function. By switching between methods, this feature is turned off and on. The coated electrode can also be operated in TIG mode.

Function is activated

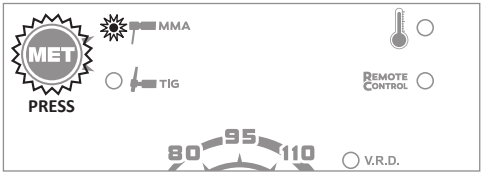

Function is deactivated

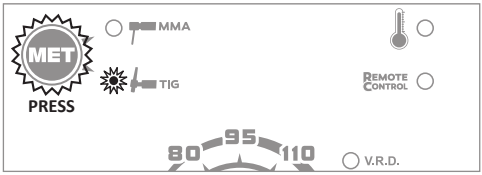

Setting ARC FORCE function (arc stability)

The function increases the energy supplied to the shortening arc with the MMA method, thereby accelerating the electrode to prevent it from sticking. The function is activated if the arc voltage drops below approx. 17 V. By setting the value, a possible increase in the welding current is determined. Press the SET button for about 3 seconds until the display shows fits the AF symbol. There are three options to choose from:

AF 0 function is off
AF 1 set to 50% AF
AF 2 set to 100% AF

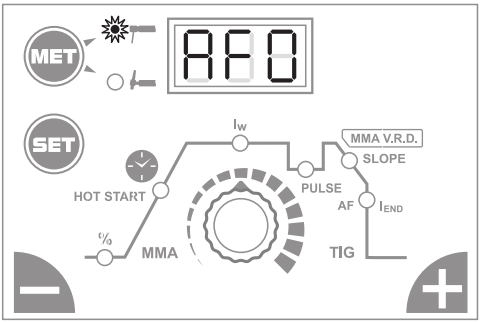

Setting the ANTI STICK function (when the electrode is stuck)

The function reduces the welding voltage to 5 V when evaluating the short-circuit at the output terminals (when the electrode is stuck to the welded material), thus allowing the electrode to easily detach from the welded material. The function can be activated or de-activated. Press the SET button for about 5 seconds until the display shows „the AS symbol. There are two options:
AS 0 function is disabled
AS 1 function is active

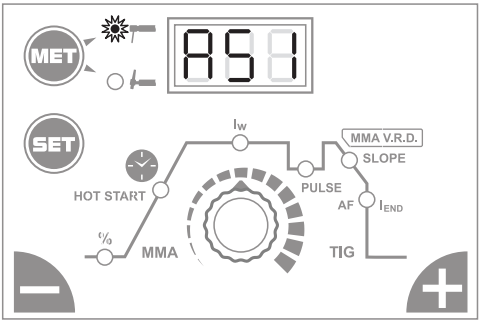

Setting the V.R.D. function (decrease of output voltage)

This is a MMA security system only. When the function is activated, the output voltage is reduced to 15 V. This function is used for underwater or high humidity environments. To activate the function, turn off the machine, press the MET button, hold the button on and switch on the machine with the main switch. The corresponding function value (ON / OFF) appears in the display. In the case of ANALOG RS, only the LED indicator is indicated. When the function is active, the warning light is on. Otherwise, the function is inactive.

Digital TIG LA RS - ON

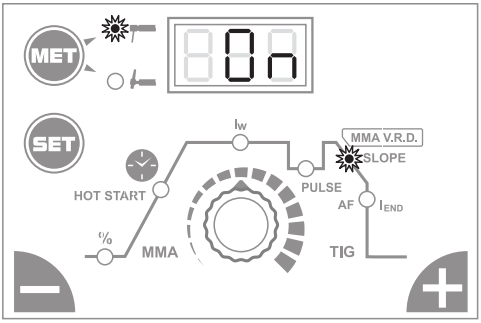

Digital TIG LA RS - OFF

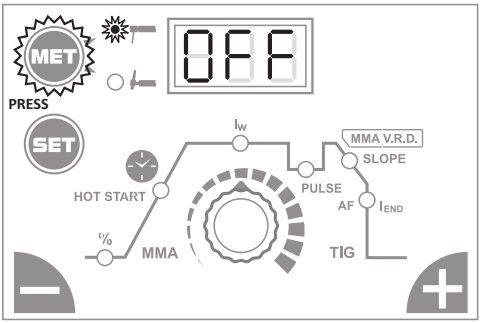

Analogue RS - ON

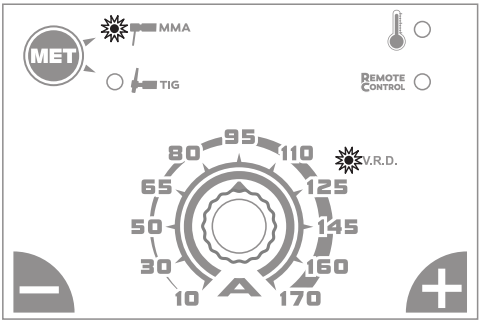

Analogue RS - OFF

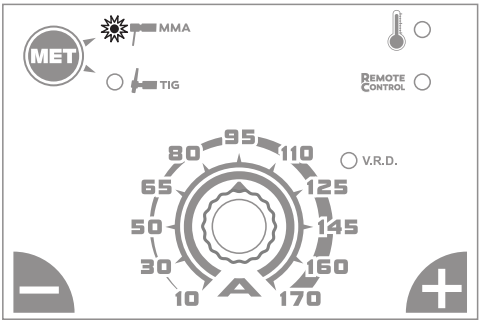

TIG LA Method

Setting the welding current

The welding current is set by the n-encoder. The main welding current is set to position I_w. The basic position of the machine is always in position I_w. When you finish setting the other functions of the method, it automatically switches to the default position automatically.

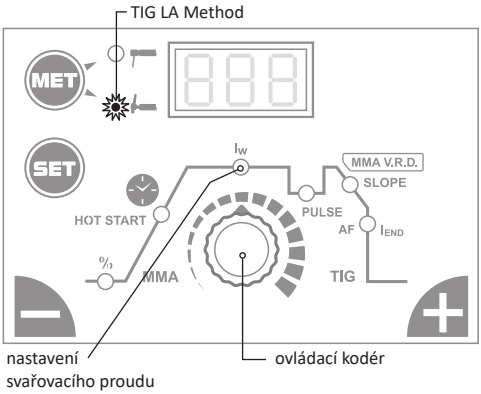

Setting the DOWN SLOPE function

The function is for the smooth end of the welding process. Together with the END CURRENT function, it prevents the creation of the crater at the end of the weld when properly adjusted. For a set period, the welding current is gradually decaying to the end current value. Press the SET button repeatedly to select the DOWN SLOPE icon and then set its value.

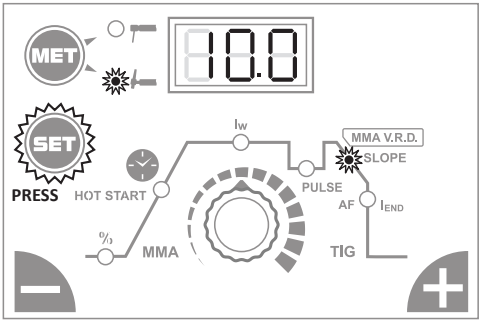

Setting the END CURRENT function

The function indicates the current value at which the welding process ends. Together with the DOWN SLOPE function, it prevents the creation of the crater at the end of the weld when properly adjusted. Press the SET button repeatedly to select the end current icon I_{END} and then set its value.

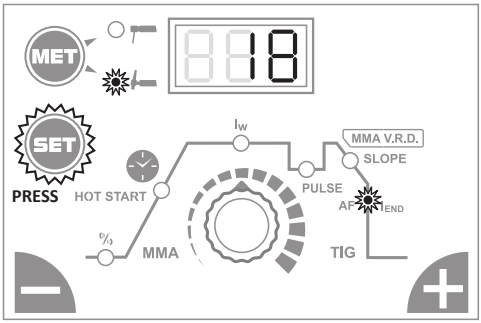

Setting the PULSE function

The function allows setting the frequency of the main welding current and the pulse current I_2. Increasing the pulse frequency reduces thermal deformation of the material and narrows the welding bath. Press the SET button repeatedly to select the PULSE icon and then set its value. If set to „0“ - the function is deactivated.

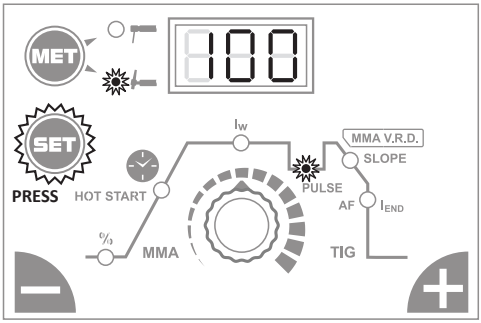

Welding process at TIG LA

Starting the gas with a valve on the welding torch.

1. Approaching the tungsten electrode to the welded material.
2. Light touch of tungsten electrode of welded material (no need to cut).
3. Removal of tungsten electrode and arcing of welding arc with LA - very low wear tungsten electrodes by touch.
4. Welding process.
5. Finishing the welding process and activating the DOWN SLOPE (crater filling) is performed by removing tungsten-electrodes to about 8 - 10 mm from the welded material.
6. Re-approach - Welding current decreases after the set time to the end value set current (eg 10 A) - filling the crater.
7. End of the welding process. The digital control automatically switches off the welding process.

Switch off the gas with a valve on the welding torch.

Welding process at TIG LA

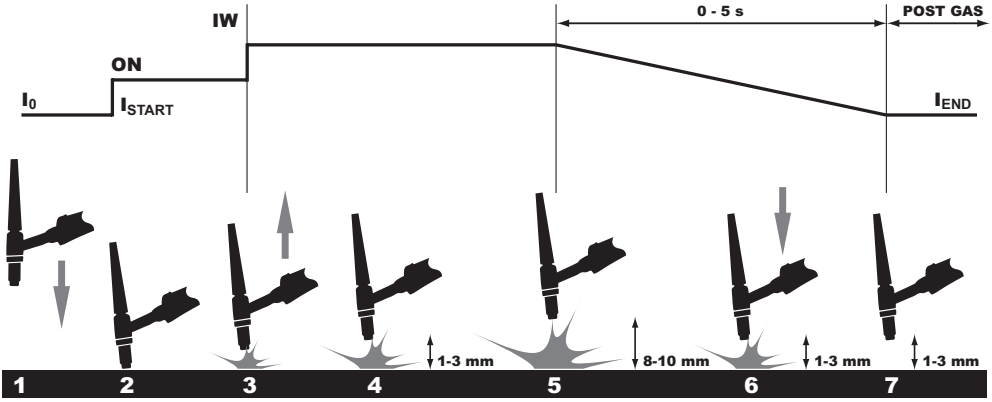

Basic rules for welding by MMA

Switch the machine to MMA mode - coated electrode. Table 1 lists the general values for the choice of the electrode, depending on its diameter and the thickness of the base material. These data are not absolute and are informative only. For exact selection, follow the instructions provided by the manufacturer of the electrodes. The current used depends on the position of the welding and the joint type and increases according to the thickness and dimensions of the part.

Table 1

Strength of welded material (mm)	Diameter of the Electrode
1,5 - 3	2
3 - 5	2.5
5 - 12	3.25
> 12	4

Table 2: Setting the welding current for the given electrode diameter

Diameter of the Electrode	Welding Current (A)
1.6	30 – 60
2	40 – 75
2.5	60 – 110
3.25	95 – 140
4	140 – 190
5	190 – 240
6	220 – 330

The approximate indication of the average current used for welding with ordinary steel electrodes is given by the following formula:

I = 50 x (Øe – 1)

where: I = the intensity of the welding current
e = the diameter of the electrode
Example for an electrode with a diameter of 4 mm:
I = 50 x (4 - 1) = 50 x 3 = 150 A

Correct electrode holding during welding

Figure 1

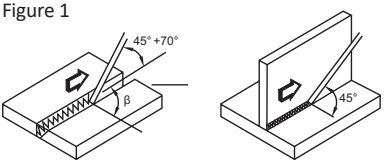

Preparation of basic material:

Table 3 lists the material preparation values. Specify the dimensions as shown in Figure 2.

Figure 2

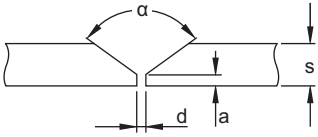

Table 3

s (mm)	a (mm)	d (mm)	α (°)
0-3	0	0	0
3-6	0	s/2 (max)	0
3 - 12	0 - 1.5	0-2	60

Welding by TIG method

Welding inverters allow TIG welding with touch-triggering. The TIG method is very effective for welding stainless steel. Switch the machine to TIG mode.

Connecting the welding torch and the cable:
Connect the welding torch to the minus pole and the ground wire to the plus pole - direct polarity.

Selection and preparation of tungsten electrodes:
Table 4 shows the welding current and diameter values for tungsten electrodes with 2% thoria - red electrode markings.

Table 4

Diameter of the Electrode (mm)	Welding current (A)
1.0	15 - 75
1.6	60 - 150
2.4	130 - 240

Prepare the Tungsten Electrode according to the values in Table 5 and Figure 3.

Obrázek 3

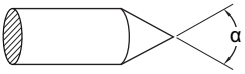

Table 5

α (°)	Welding current (A)
30	0-30
60-90	30-120
90-120	120-250

Grinding of tungsten electrodes:
By proper choice of the tungsten electrode and its preparation will affect the properties of the welding arc, weld geometry and electrode life. The electrode must be gently grinded in the longitudinal direction as shown in Figure 4.
Figure 5 shows the effect of grinding the electrode on its service life.

Figure 4

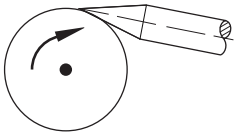

Figure 5

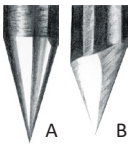

Figure 5A - Fine and even grinding of the electrode in the longitudinal direction - Lifetime up to 17 hours
Figure 5B - Coarse and uneven grinding in the transverse direction - Lifetime 5 hours

Parameters to compare the influence of the electrode grinding method are given using:
HF ignition el. arc, electrodes Ø 3.2 mm, welding current 150 A and welded materiál - pipe.

Protective gas:
For TIG welding, it is necessary to use argon with a purity of 99.99%. Determine the amount of flow according to Table 6.

Table 6

Welding current (A)	Diameter of electrode (mm)	Welding nozzle		Flow of gas (l/min)
		n (°)	Ø (mm)	
6-70	1.0	4/5	6/8.0	5-6
60-140	1.6	4/5/6	6.5/8.0/9.5	6-7
120-240	2.4	6/7	9.5/11.0	7-8

Holding the welding torch during welding:

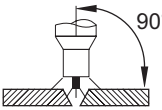

Position W (PA)

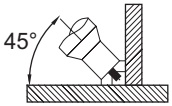

Position H (PB)

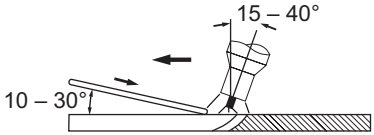

Position S (PF)

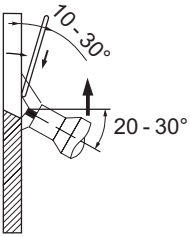

Position S (PF)

Preparation of basic material:
Table 7 lists the material preparation values.
Dimensions are determined according to Figure 6.

Figure 6

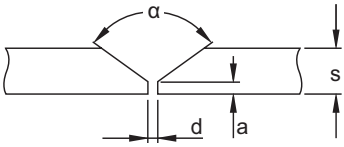

Table 7

s (mm)	a (mm)	d (mm)	α (°)
0-3	0	0	0
3	0	0.5 (max)	0
4-6	1-1.5	1-2	60

Basic rules during welding by TIG method:

1. Purity - grease, oil and other impurities must be removed from the weld during welding. It is also necessary to mind purity of additional material and clean gloves of the welder during welding.
2. Leading additional material - oxidation must be prevented. To do so, flashing end of additional material must be always under the protection of gas flowing from the hose.
3. Type and diameter of tungsten electrodes - it is necessary to choose them according to the values of the current, polarity, type of basic material and composition of protective gas.
4. Sharpening of tungsten electrodes - sharpening the tip of the electrode should be done in trav-erse/ horizontal direction. The tinier the roughness of the surface of the tip is, the calmer the burning of the el. arc is as well as the greater durability of the electrode is.
5. The amount of protective gas - it has to be adjusted according to the type of welding or according to the size of gas hose. After finishing the welding gas must flow sufficiently long to protect material and tungsten electrode against oxidation.

Typical TIG welding errors and their impact on weld quality:

The welding current is too -

Low: unstable welding arc

High: Tungsten electrode tip breaks lead to turbulent arcing.

Further, mistakes may be caused by poor welding torch guidance and poor addition of additive material.

Warning about possible problems and their remedy

The extension cord and welding cables are considered the most common cause of the problem. **If you have any problems, follow these steps:**

- Check the value of the supplied mains voltage.
- Make sure that the power cord is fully connected to the power outlet and the main power switch.
- Make sure the fuses or the circuit breakers are OK.

If you are using the extension cable, check its length, cross-section and connection.

Make sure the following parts are not defective:

- Main switch of the grid
- Power socket and main power switch

NOTE: Despite your required technical skills necessary to repair the generator, we recommend contacting trained personnel and our Technical Service Department in case of damage.

Error messages

Error message ERR

The machine thermal protection (machine overheating) has been activated. The machine will not respond to any buttons and will not operate until the machine has cooled down.

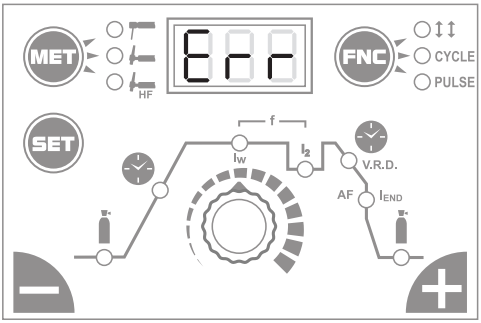

Signaling - - -

Short-circuit signaling on output terminals. E.g. sticking electrode, faulty output voltage.

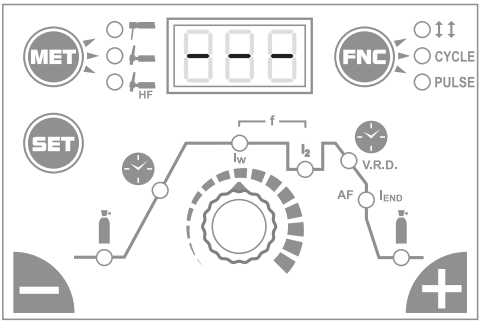

ROUTINE MAINTENANCE AND INSPECTION

Check according to EN 60974-4. Always before Use the machine to check the condition of the welding and supply lines cable. Do not use damaged cables.

Perform a visual check:

- welding cables
- power grid
- welding circuit
- covers
- control and indicator elements
- general status

WARNING

When operating the machine on higher welding currents, the taking of the machine from the network can exceed the value 16 A. In this case, the fork must be replaced and the industrial fork corresponding to the 20 A fuse! This protection must also correspond to the design and protection of the electrical wiring.

Výrobní štítek / Výrobný štítok / Production label / Produktionsschild
Tabliczka znamionowa

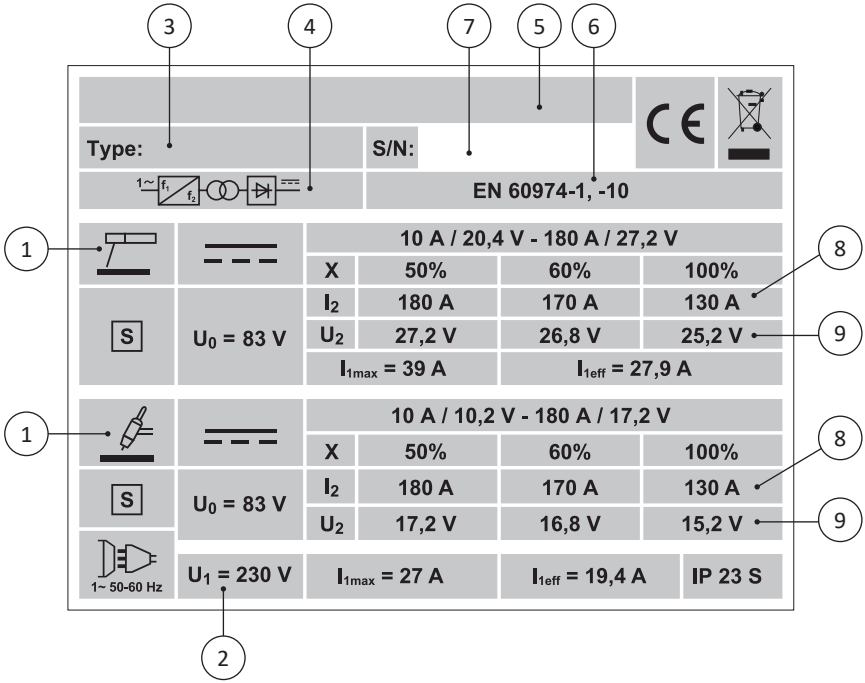

Poz. pos.	Popis / CZ	Opis / SK	Description / ENG	Beschreibung / DE	Opis / PL
1	Svařovací metoda	Zváracia metóda	Welding method	Schweißmethode	Metoda spawania
2	Napájecí napětí	Napájacie napätie	Supply voltage	Versorgungsspannung	Napięcie zasilania
3	Typ stroje	Typ stroja	Name of the machine	Maschinentyp	Typ urządzenia
4	Svařovací stroj	Zvárací stroj	Description of the machine	Schweißgerät	Spawarka
5	Jméno a adresa výrobce	Názov a adresa výrobcu	Name and address of manufacturer	Name und Adresse des Herstellers	Nazwa i adres producenta
6	Normy	Normy	Standards	Normen	Normy
7	Výrobní číslo	Výrobné číslo	Serial number	Seriennummer	Nr produkcyjny
8	Proud při zatížení	Prúd pri zaťažení	Nominal welding current	Laststrom	Natężenie prądu podczas obciążenia
9	Napětí při zatížení	Napätie pri zaťažení	Nominal load voltage	Spannung unter Last	Napięcie podczas obciążenia

Seznam náhradních dílů / Zoznam náhradných dielov
List of spare parts / Liste der Ersatzteile
Części zamienne

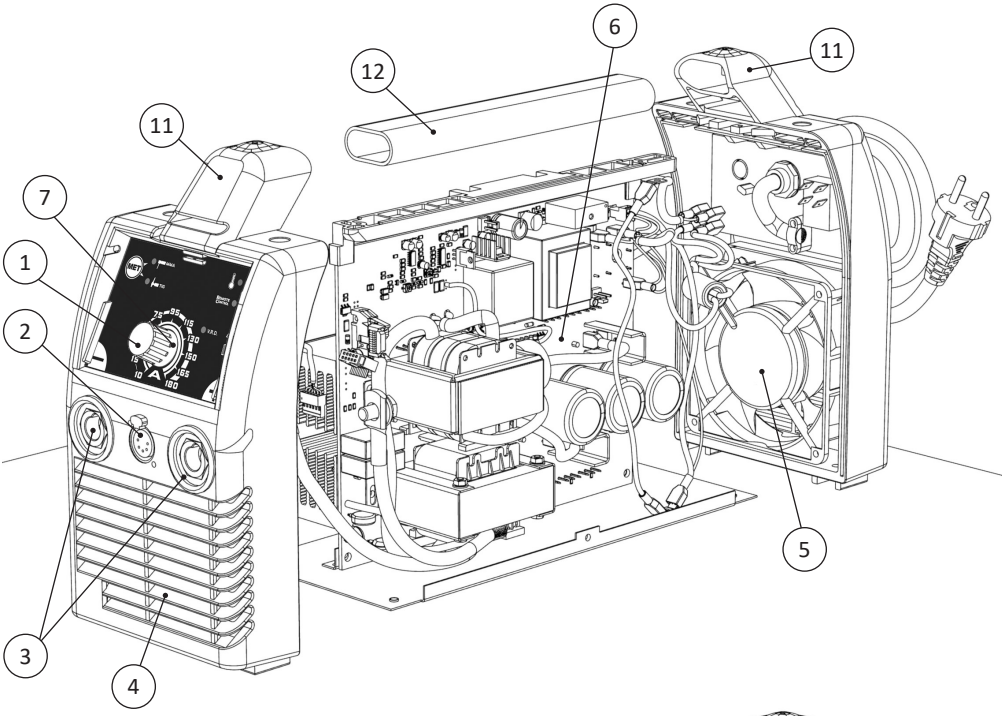

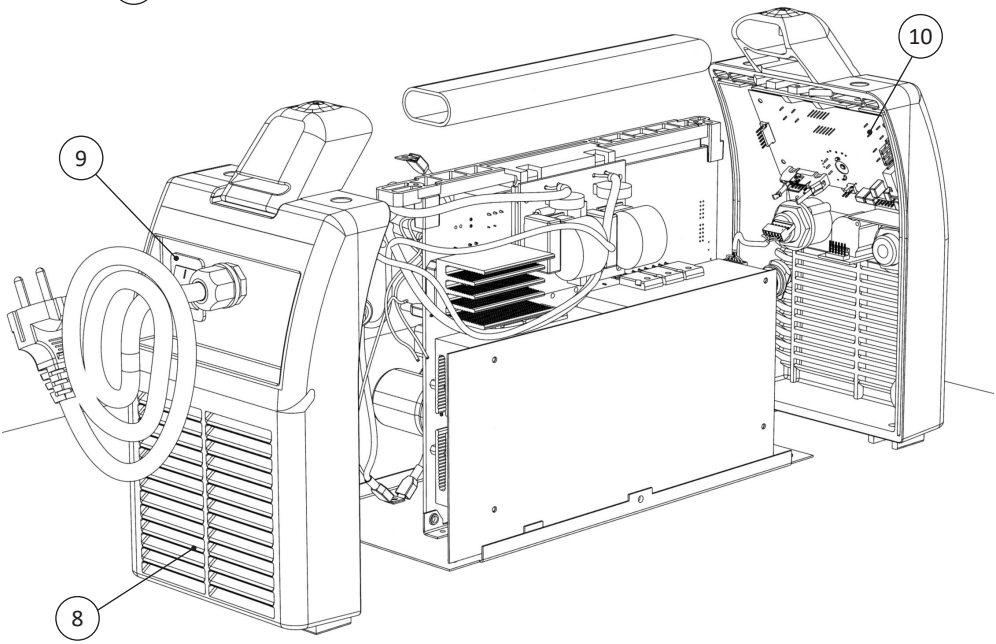

Poz. pos.	Popis / CZ	Opis / SK	Description / ENG	Code
1	Knoflík přístrojový	Gombík prístrojový	Current adjustment knob	30860
2	Konektor 5-kolíkový XLR	Konektor 5-kolíkový XLR	5-pin-type plug XLR	42045
3	Rychlospojka - zásuvka 35-50	Rýchlospojka – zásuvka 35-50	Gladhand - socker 35-50	30423
4	Čelo přední	Čelo predné	Front panel	31131
5	Ventilátor	Ventilátor	Fan	30750
6	Plošný spoj - výkon	Plošný spoj - výkon	PCB - power	12295
7	Ovládací kodér (TIG LA RS)	Ovládací kodér (TIG LA RS)	Control encoder (TIG LA RS)	41564
7	Ovládací potenciometr (analog RS)	Ovládací potenciometr (analog RS)	Control potentiometer (analogue RS)	40443
8	Čelo zadní	Čelo zadné	Rear panel	31142
9	Vypínač hlavní 25 A	Vypínač hlavný 25 A	Main switch 25 A	34628
10	Plošný spoj – analog	Plošný spoj – analog	PCB – analog	12357
10	Plošný spoj - LA	Plošný spoj - LA	PCB - LA	12354
11	Držák madla	Držiak držadla	Handrail holder	30371
12	Madlo	Držadlo	Handrail	12490

Poz. pos.	Beschreibung / DE	Opis / PL	Code
1	Geräte Knopf	Pokrętło	30860
2	Konnektor 5 Polig XLR	Wtyczka sterująca 5 PIN XLR	42045
3	Schnellkupplung - Kabelsteckverbindung 35-50	Gniazdo panelowe 35-50	30423
4	Vordere Stirn	Panel przedni	31131
5	Ventilator	Wentylator	30750
6	Platine - power	Płyta elektroniki - power	12295
7	Regelungskoder (TIG LA RS)	N-koder sterujący (TIG LA RS)	41564
7	Steuerpotentiometer (analog RS)	Sterujący potencjometr (analogowe RS)	40443
8	Hintere Stirn	Panel tylni	31142
9	Hauptschalter 25 A	Wyłącznik główny 25 A	34628
10	Platine – analog	Płyta elektroniki – analog	12357
10	Platine - LA	Płyta elektroniki - LA	12354
11	Griffhalterung	Mocowanie uchwytu	30371
12	Griff	Uchwyt	12490

Elektrotechnické schéma / Elektrotechnická schéma
Electrical diagram / Elektrische schema / Schemat elektrotechniczny

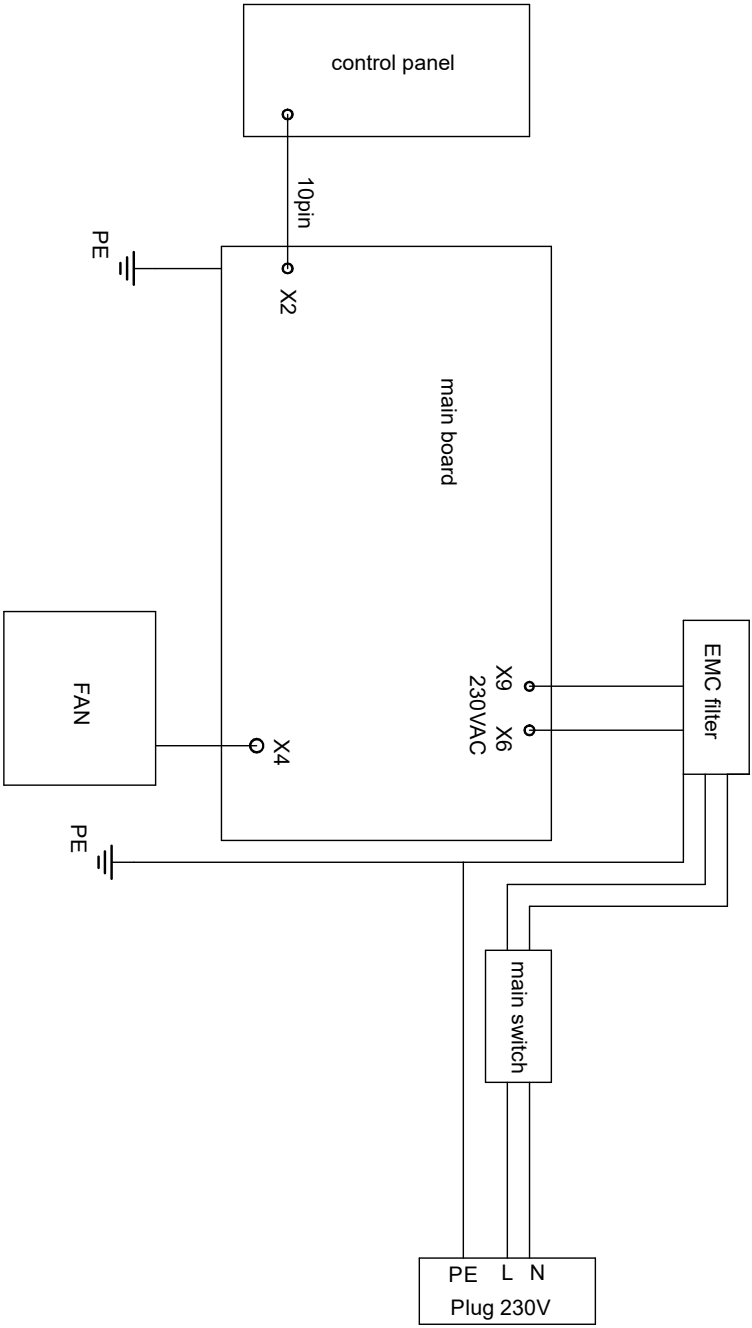

Osvědčení o jakosti a kompletnosti výrobku Osvedčenie o akosti a kompletnosti výrobku / Testing certificate Qualitätszertifikat des Produktes / Deklaracja Jakości i Kompletności	
Název a typ výrobku Názov a typ výrobku / Type Bennenung und Typ Nazwa i rodzaj produktu	☐ **150** ☐ **170** ☐ **190** ☐ **150 TIG LA** ☐ **170 TIG LA** ☐ **190 TIG LA**
Výrobní číslo stroje / Výrobné číslo Serial number / Herstellungsnummer der Maschine / Numer produkcyjny maszyny	
Výrobce Výrobca Producer Produzent Producent	
Razítko OTK Pečiatka OTK Stamp of Technical Control Department Stempel der technische Kontrollabteilung Pieczątka Kontroli Jakości	
Datum výroby / Dátum výroby Date of production / Datum der Produktion Data produkcji	
Kontroloval / Kontroloval Inspected by / Geprüft von / Sprawdził	

Záruční list / Záručný list / Warranty certificate / Garantieschein / Karta Gwarancyjna	
Datum prodeje / Dátum predaja Date of sale / Verkaufsdatum Data sprzedaży	
Razítko a podpis prodejce Pečiatka a podpis predajca Stamp and signature of seller Stempel und Unterschrift des Verkäufers Pieczątka i podpis sprzedawcy	

Záznam o provedeném servisním zákroku / Záznam o prevedenom servisnom zákroku Repair note / Eintrag über durchgeführten Serviceeingriff Zapis o wykonaniu interwencji serwisowej			
Datum převzetí servisem Dátum prevzatia servisom Date of take-over Datum Übernahme durch Servisabteilung Data odbioru przez serwis	Datum provedení opravy Dátum prevedenia opravy Date of repair Datum Durchführung der Reparatur Data wykonania naprawy	Číslo reklam. protokolu Číslo reklam. protokolu Number of repair form Nummer des Reklamationsprotokoll Numer protokołu reklamacyj	Podpis pracovníka Podpis pracovníka Signature of serviceman Signature of serviceman Unterschrift von Mitarbeiter Podpis pracownika

Výrobce si vyhrazuje právo na změnu.
Výrobca si vyhradzuje právo na zmenu.
The producer reserves the right to modification.
Hersteller behaltet uns vor Recht für Änderung.
Producent zastrzega sobie prawo do zmian.