NÁVOD K OBSLUZE / SVAŘOVACÍ STROJ CZ

NÁVOD NA OBSLUHU / ZVÁRACÍ STROJ SK

INSTRUCTION FOR USE / WELDING MACHINE EN

BEDIENUNGSANLEITUNG / SCHWEIßGERÄTE DE

INSTRUKCJA OBSŁUGI / MASZYNA SPAWALNICZA PL

305/405

STANDARD - PROCESSOR - SYNERGIC

3500/4100

STANDARD - PROCESSOR

MADE IN EU CE

ENGLISH

Contents

Introduction

Thank you for purchasing one for our products.

Before using the equipment you should carefully read the instructions included in this manual.

It is also necessary to read all the safety regulations in the enclosed document „Safety instructions and maintenance“.

In order to get the best performance from the system and ensure that its parts last as long as possible, you must strictly follow the usage instructions and the maintenance regulations included in this manual. In the interest of customers, you are recommended to have maintenance and, where necessary, repairs carried out by the workshops of our service organisation, since they have suitable equipment and specially trained personnel available. All our machinery and systems are subject to continual development. We must therefore reserve the right to modify their construction and properties.

Description

Machines 305, 405, 3500 and 4100 are professsional welding machines designed for MIG (Metal Inert Gas) and MAG (Metal Active Gas) welding. It is sources of welding current with flat characteristics. It concerns welding in protection atmosphere of active and intact gases when added material is in a form of „infinite“ wire supplied into the weld by the wire feeding. These methods are very productive, especially for the welds of construction steel, low steel, aluminium and its alloys.
The machines are designed as movable sets, differing from each other in their efficiency. The source of welding current, wire supply and feed are in one compact metal case with two fixed and two turning wheels.
Welding machines have been designed for welding of thin and thickness materials for wires used from 0.6 to 1.2 mm. Standard equipment of machines can be found in chapter „Equipment of welding machines“. Welding machines confirm to all European Union and Czech Republic standards and directives in force.

Table 1

Technical data		305	405	3500	4100
Mains voltage 50/60 Hz	[V]	3 x 400	3 x 400	3 x 400	3 x 400
Welding current range	[A]	30 - 280	30 - 350	30 - 280	50 - 350
Output voltage settings	[V]	17 - 38	18 - 40	19.2 - 41.9	22 - 51
Regulation steps	-	20	40	20	40
Duty cycle	[A]	280 (30 %)	350 (30 %)	280 (40 %)	350 (35 %)
Duty cycle 60 %	[A]	260	300	270	280
Duty cycle 100 %	[A]	220	260	235	240
Mains current/input 60 %	[A/kVA]	12.3 / 8.6	15.3 / 10.6	14.8 / 10.6	17.3 / 12.8
Mains protection-slow, D	[A]	25	25	25	25
Winding	-	Cu	Cu	Cu / Al	Cu / Al
Wire feeder	-	2-roll	4-roll	4-roll	4-roll
Digital voltammeter	-	Yes	Yes	Yes	Yes
Standardly equiped roll	[mm]	1.0 - 1.2	1.0 - 1.2	1.0 - 1.2	1.0 - 1.2
Wire feed speed	[m/min]	0.5 - 20	0.5 - 20	0.5 - 20	0.5 - 20
Diameter of wire - Fe - Al - Tube wire	[mm]	0.6 - 1.2 0.8 - 1.2 0.8 - 1.2	0.6 - 1.2 1.0 - 1.2 0.8 - 1.2	0.6 - 1.2 0.8 - 1.2 0.8 - 1.2	0.6 - 1.2 1.0 - 1.2 0.8 - 1.2
Protection degree	-	IP 21S	IP 21S	IP 21S	IP 21S
Insulation class	-	F	F	F, H	F, H
Standards	-	EN 60974-1, EN 60974-5, EN 60974-10			
Dimensions LxWxH	[mm]	806x490x822	806x490x822	902x510x890	902x510x890
Weight	[kg]	93	101	88	93

Types of Machines

Machines 305, 405, 3500 and 4100 are delivered in the following designs:

Analogical type STANDARD

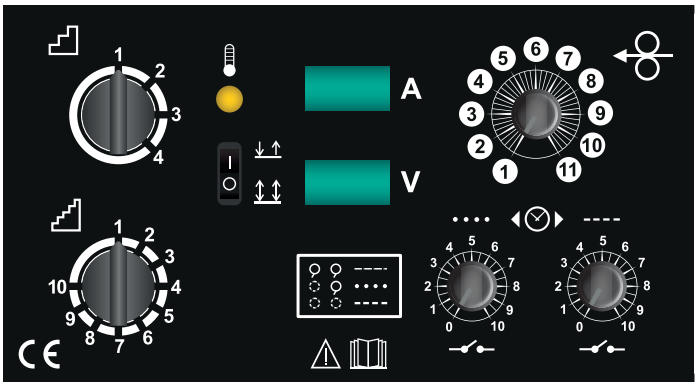

Easy and reliable control over machines. Operating is secured by one potentiometer of wire feed and two other potentiometers with a switch which controls switching on and setting spot and pulse functions. This type is supplied with a digital voltampermeter in a standard way.

Digital type PROCESSOR

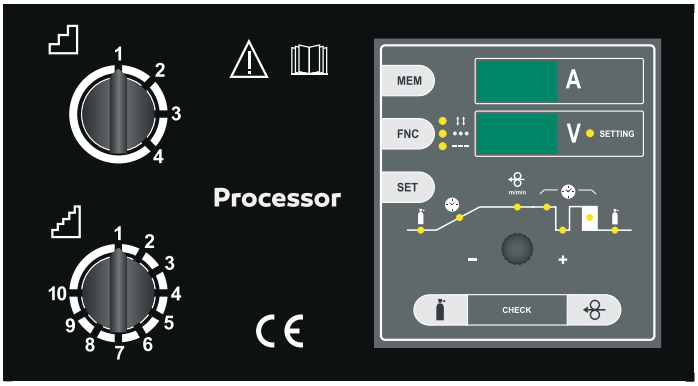

A simple solution of having control over all functions for MIG/MAG welding. Simple control and setting of all functions is secured by one potentiometer and two buttons. Function LOGIC also makes an easy control possible. Machines with this control are supplied with a digital voltampermeter in a standard way. A simple solution of having control allows setting values of pre-gas and post-gas, function SOFT START, burning out of wire, spot and pulse welding. Regulation allows setting two-time and four-time modes. Easy advanced feeding of wire to wire feeder. Electronic regulation of speed of wire feed manages feedback regulation of wire feed which secures constant set speed of wire shifting.

Digital type SYNERGIC (except 3500, 4100)

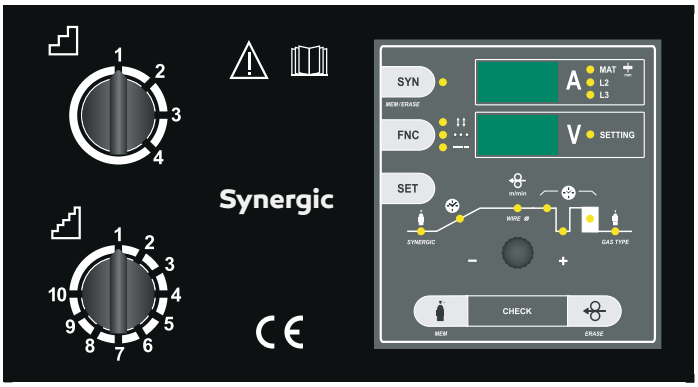

It significantly makes setting of welding parameters possible. An operator sets up the type of a program by using easy setting of diameter of welding wire and used protective gas. Then you can simply set up voltage when you use the switch and control unit Synergic chooses the best parameters of speed of wire feed. Simple operating and setting of all functions is secured by one potentiometer and two buttons. Function LOGIC also makes an easy control possible. Machines with this control are supplied with a digital voltamperme-ter with memory in a standard way. A simple solution of having control allows setting values of pre-gas and post-gas, function SOFT START, burning out of wire, spot and pulse welding. Regulation allows setting two--time and four-time modes. Easy advanced feeding of wire to wire feeder. Electronic regula-tion of speed of wire feed manages feedback regulation of wire feed which secures constant set speed of wire shifting.

Installation

The installation site for the system must be carefully chosen in order to ensure its satisfactory and safe use. The user is responsible for the installation and use of the system in accordance with the producer's instructions contained in this manual. Before installing the system the user must take into consideration the potential electromagnetic problems in the work area. In particular, we suggest that you should avoid installing the system close to:

- **signalling, control and telephone cables**
- **radio and television transmitters and receivers**
- **computers and control and measurement instruments**
- **security and protection instruments**

Persons fitted with pacemakers, hearing aids and similar equipment must consult their doctor before going near a machine in operation. The equipment's installation environment must comply to the protection level of the frame i.e. IP 21S. The system is cooled by means of the forced circulation of air, and must therefore be placed in such a way that the air may be easily sucked in and expelled through the apertures made in the frame.

Equipment of machines

Machines are also standardly equipped with:

- Earthing cable 3 m long with a grip.
- Hose for gas connection 1.5 m long.
- Cable for gas heating connection.
- Roller for wire of 1.0 and 1.2 mm in diameter.
- Accompanying documentation.
- Reduction for wire 5 kg and 18 kg.
- Replacement fuse for control Electronics.
- 2/4-roll wire feeder.

Special accessories for ordering:

- Welding torch 3, 4 or 5 m long.
- Cylinder pressure regulators for CO_2 or mixed gases of Argon.
- Spare rollers for wires different in diameter.
- 4-roll wire feeder.
- Spare parts of welding torch.
- Earthing cable 4 m or 5 m long.

Connection to the electrical power supply

Before connecting the welder to the electrical supply check, that the machines plate rating corresponds to the supply voltage and frequency and that the line switch of the welder is in the position „0".

Use original plug for machines to connect to power supply. Machines are designed for TN-C-S grid. It's provided with 5-pin plug. The middle line wire is not used. Eventual changing of plug can be made only by person with electrotechnical qualification. If you need to change the plug, follow this:

Connection to the power supply must be carried out using of four polar cable:

- three conducting wires, it does not matter, what is the order of phases
- the fourth, yellow-green wire is used for making the „EARTH" connection

Connect a suitable normalized plug to the power cable. Provide for an electrical socket complete with fuses or an automatic switch.

TABLE 2: Shows the recommended load values for retardant supply fuses chosen according to the maximum nominal current supplied to the welder and the nominal supply voltage.

NOTE 1: Any extensions to the power cable must be of a suitable diameter, and absolutely not of a smaller diameter than the special cable supplied with the machine.

NOTE 2: It is not advisable to plug up the welder to motordriven generators, as they are known to supply an unstable voltage.

Control apparatus

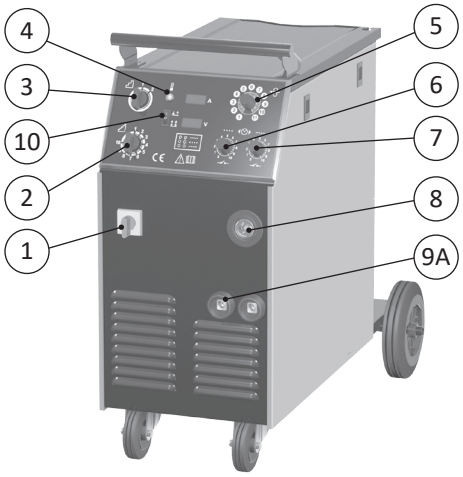

Picture 1A - TYPES 305, 405

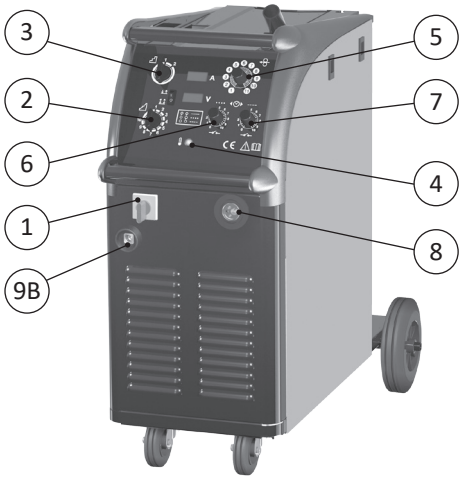

Picture 1B - TYPES 3500, 4100

Position 1 Supply switch. In the „O“ position the welder is off.
Position 2 10-positional voltage changeover switch.
Position 3 2- or 4- positional voltage changeover switch.
Position 4 Thermostat yellow signal light. When this light comes it means that the overheat cut-off has come on, because the work cycle limit has been exceeded. Wait for a few minutes before starting to weld again.

Only STANDARD

Position 5 Potentiometer of speed adjustment of the wire feed.
Position 6 Switch of spot welding function with potentiometer of adjustment of spot welding length.
Position 7 Switch of PAUSE function with potentiometer of adjustment of pause length between each spots - slow pulses.

Position 8 EURO connector of welding burner connection.
Position 9A Choke outlets for earth cable connection. Type 305/405 is used to set the dynamic properties of the welding current source (see Table 3).
Position 9B Quickcoupling for grounding cable connection.
Position 10 Switch 2/4-stroke

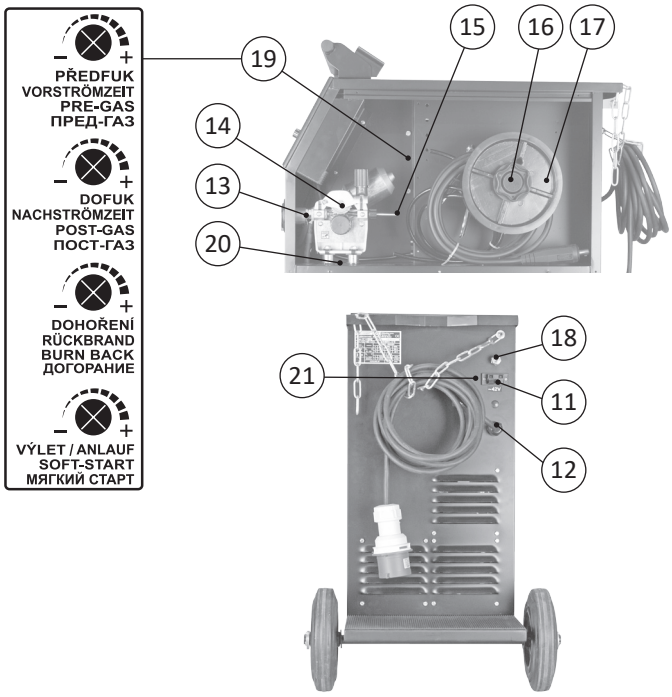

Picture 2

Position 11 Terminal board of voltage supply for gas 42 V AC heating.
Position 12 Supply cable with connection.
Position 13 Loading tube of EURO connector.
Position 14 Wire feeder.
Position 15 Loading bowden.
Position 16 Wire spool holder with brake.
Position 17 Adaptor of wire spool.
Position 18 Automatic electromagnetic gas valve.
Position 19 Setting of potentiometers: (only Standard)
Pre-gas - setting the time of pre-gas before start of welding process.
Burning out - setting the time of burning out of wire after the welding process
Post-gas - setting the time of post-gas after the welding process
Wire let-out - the wire feed speed before ignition of the welding arc
Position 20 Wire feed button (only STANDARD).
Position 21 GAS TEST button (only STANDARD).

Digital control PROCESSOR

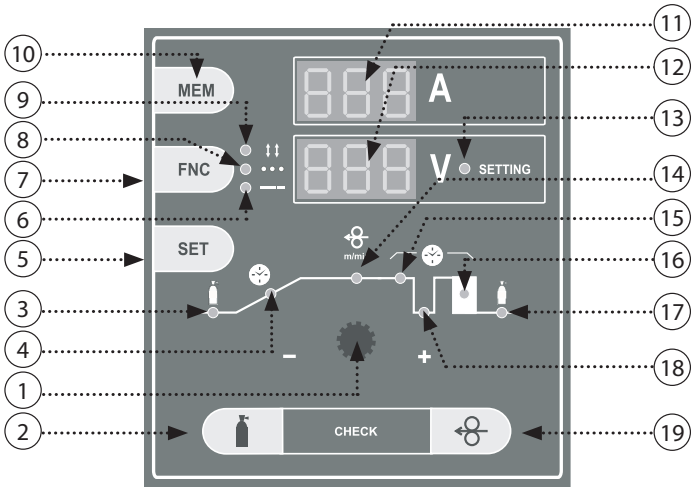

Picture 3

Table 2

		305	405	3500	4100
I Max	[A]	280 (30 %)	350 (30 %)	280 (40 %)	350 (35 %)
Installed power	[kVA]	9.9	13.5	7.8	11
Protection slow, char. D	[A]	25	25	25	25
Diameter of input connection	[mm²]	4 x 2.5	4 x 2.5	4 x 2.5	4 x 2.5
Earth cable-cut	[mm²]	35	70	35	50
Welding torch		KTB 25/36	KTB 36	KTB 25/36	KTB 36

Position 1 Potentiometer setting parameters.
Position 2 Button TEST OF GASES.
Position 3 LED illustrating pre-gas.
Position 4 LED illustrating start of speed of welding wire.
Position 5 Button SET - it allows choosing setting parameters.
Position 6 LED illustrates switching on of pulse function.
Position 7 Button welding mode - it allows switching on and off of two--time and four-time modes, spot and pulse welding.
Position 8 LED illustrating spot welding mode.
Position 9 LED illustrating four-time welding mode.
Position 10 Button MEM allows loading of values of voltage and welding current which were measured last time.
Position 11 Display of welding current.
Position 12 Display showing welding pressure and values with LED SETTING light up. They are values of speed of wire feeder, pre-gas etc.
Position 13 LED SETTING which is on only when parameters are shown speed of wire feeder, start of wire, pre-gas and post-gas, spot time and pulse time, burning out of wire.
Position 14 LED illustrating speed of shifting of welding wire.
Position 15 LED illustrating spot time.
Position 16 LED illustrating burnt out time.
Position 17 LED illustrating post-gas time
Position 18 LED illustrating pulse time.
Position 19 Button wire feeder.

Digital control SYNERGIC

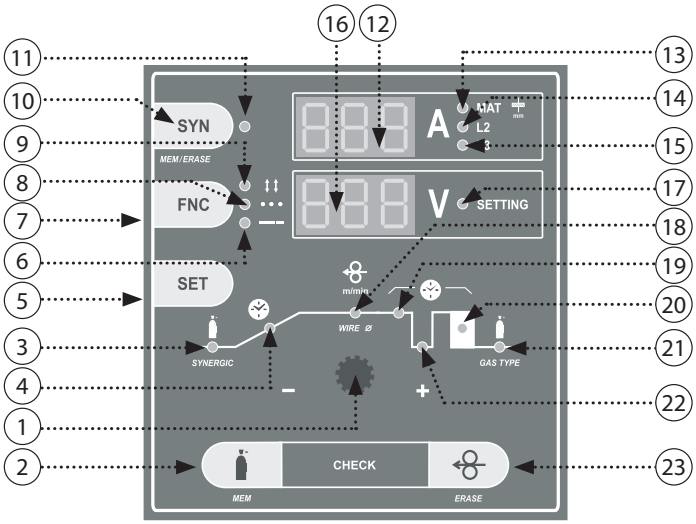

Picture 4

Position 1 Potentiometer setting parameters.
Position 2 Button TEST OF GASES.
Position 3 LED illustrating pre-gas.
Position 4 LED illustrating start of speed of welding wire.
Position 5 Button SET - it allows choosing setting parameters.
Position 6 LED illustrates switching on of pulse function.
Position 7 Button welding mode - it allows switching on and off of two--time and four-time modes, spot and pulse welding.
Position 8 LED illustrating spot welding mode.
Position 9 LED illustrating four-time welding mode.
Position 10 Switch of synergic function - SYN on and off.
Position 11 LED signalling switching synergic function on.
Position 12 Display of welding current.
Position 13 LED signalling approximate power values of welding material on display. When diode is off display shows value of welding current.
Position 14 LED shows which outlet of inductor should be used.
Position 15 LED shows which outlet of inductor should be used.
Position 16 Display shows welding current. When LED "SETTING" is on, display shows values of wire feeder speed, pre-gas, post-gas etc.
Position 17 LED SETTING which is on only when parameters are shown: speed of wire feeder, start of wire, pre-gas and post-gas, spot time and pulse time, burning out of wire.
Position 18 LED illustrating speed of shifting of welding wire.
Position 19 LED illustrating spot time.
Position 20 LED illustrating burnt out time.
Position 21 LED illustrating post-gas time.
Position 22 LED illustrating pulse time.
Position 23 Button for wire lead on.

Connection of welding torch

With the machine disconnected from the supply, connect welding torch into EURO connector (pic. 1A/B, position 7) and tighten well the cap nut. Connect the grounding cable to the grounding quick coupler (pic. 1A/B, position 9A/B) and tighten the ground quick coupler. At the machines series 305/405, appoint the outlet as shown in Table 3 or refer to the „Recommended welding parameter setting" table. Welding torch and earth cable should be as short as possible, close to each other and positioned at the floor level or close to it.

Table 3

Induction outlet	305	405
L1	30 A - 120 A	30 A - 180 A
L2	80 A - 250 A	140 A - 350 A

Welding part

The part to be welded must always be connected to earth in order to reduce electromagnetic emission. Much attention must be afforded so that the earth connection of the part to be welded does not increase the risk of accident to the user or the risk of damage to other electric equipment.

Connection of the welding wire and adjustment of gas flow

Before connecting the welding wire, it is necessary to check the wire feed rolls if they correspond to the profile of roll groove. When using the steel welding wire, it is necessary to use the roll with V-shaped roll groove.

Changing of wire feed roll

Rolls are two-grooved. These grooves are designed for two different diameter of the wire (e.g. 0.8 and 1.0 mm).

- lift the holding-down mechanism
- screw out the locking plastic screw and take out the roll
- if there is a suitable groove on the roll, turn the roll and put it back on the shaft and secure it with a plastic locking screw

Connection of welding wire

- take off the side cover of wire container
- put on the wire spool onto the holder into the container
- cut off the end of the wire fastened to the edge of the roller and lead it into the loading bowden (pic. 2, pos. 15), then through the roll of feed into the loading tube (pic. 2, pos. 13) 10 cm at least, check if the wire leads through the right feed groove
- tilt the holding-down roll down and return the holding-down mechanism into the vertical level
- adjust the nut pressure of thrust to secure the wire feed without problems and deformation by too much thrust
- adjust the welding wire coil brake so that the coil turns freely when the feed mechanism is switched off. Too tightened brake greatly straps the feed mechanism and wire may slip in the pulleys and misfeed. The brake adjusting screw is located under the plastic screw of the bobbin holder (pic. 5).
- dismount the gas tip of welding torch
- unscrew the flow drawing tip
- connect the socket plug into the network
- turn on the main switch into pos. 1
- press the wire feed button for STANDARD inside the machine (pic. 2, pos. 20), for PROC./SYN. on the control panel
- after the run of wire from the torch, screw the flow drawing tie and gas tube
- connect the protective gas to the gas valve (pic. 2, pos. 18)
- before welding use anti-spatter spray in the space of gas tube and flow drawing tie; in that way you prevent adherence of metal spatter and prolong the life of gas tube

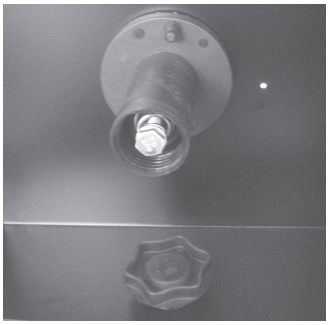

Picture 5

WARNING! During wire threading don't aim the torch against eyes!

Changes when useing aluminium wire

For welding with aluminium wire it is necessary to use a special roll with „U" profile (chapter "Spare parts of wire feed"). In order to avoid problems with „ruffle" of wire, it is necessary to use wire in diameter min. 1.0 mm from alloys AlMg3 or AlMg5. Wires from alloys A199.5 or AlSi5 are too soft and can easily cause problems with feed. For welding of aluminium it is necessary to equip the torch with teflone bovden and special flow drawing tie. As shielding atmosphere it is necessary to use pure Argon.

Adjustment of gas flow

Electric arc and welding pool must be perfectly protected by gas. Too little amount of gas cannot create necessary shielding atmosphere and on the contrary, too big amount of gas entrains air into electric arc, which makes the weld imperfectly protected.
Proceed as follows:

- fix the gas tube with the filter on the inlet of the gas valve on the back side of the machine (pic. 2, pos. 18)
- if you use gas carbon dioxide, it is suitable to plug in gas heating (during the flow less than 6 litres/min the heating is not necessary)
- plug in the cable of heating into the socket (pic. 2, pos. 11) on the machine and into the connector at cylinder pressure regulator, polarity is not important
- press GAS TEST button - for STANDARD from the rear of the machine (pic. 2, pos. 21), for PROC./SYN. on the control panel. Turn adjustment screw on the bottom side of pressure valve until flow indicator shows required flow, then release the button
- if the machine was not used for a longer time, or after entire change of welding torch, it is recommended to blow ways by fresh gas before you start welding

Adjustment of welding parameters

Adjusted parameters depend on used protective gas, wire diameter, applied wire type, size and position of a weld etc.
Reference setting of wire speed and switch positions can be found in pages 50 - 53.

Machines STANDARD

Adjustment of main welding parameters of welding voltage and speed of wire shift is carried out with a potentiometer of wire speed (pic. 1A/B, pos. 5) and a voltage switch (pic. 1A/B, pos. 2, 3). You shall always allocate speed of wire shift to adjusted voltage (switch position 1-20/1-40).

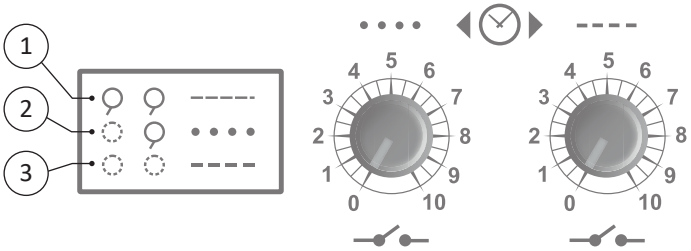

1 - Both potentiometers switched off - function switched off, normal welding
2 - Left Potentiometer Active / Right Off - Set the spot time
3 - Both potentiometers active - set the pulse time

Machines PROCESSOR/SYNERGIC

Setting of main welding parameters of welding voltage and wire feed speed by a potentiometer (pic. 3, 4, pos. 1) and a voltage switch (pic. 1A/B, pos. 2, 3). The wire speed is always assigned to the set voltage (switch position 1-20/1-40).

Setting speed of wire shift

Press button SET until you switch on LED marked in the picture.

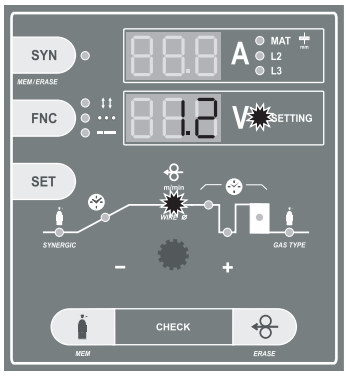

Use the potentiometer to set up required value of shift speed within range 1-20 m/min

NOTE 1: Speed of wire shift can also be adjusted and changed during welding. Either a potentiometer or a remote control UP/DOWN can be used. During welding (turning the potentiometer).

NOTE 2: Bottom display shows speed of wire shift only if red LED SETTING and LED "m/min" are on.

Adjustment of other welding parameters

Controlling electronics of machines PROCESSOR and SYNERGIC enables adjustment of the following welding parameters:

- Time duration of pre-gas (time of protective gas blow before the beginning of welding process).
- Time of start of wire shift speed - function SOFT START (time of start from minimum shift speed up to value of adjusted welding wire speed, only PROCESSOR).
- Approaching wire speed (table 4).
- Speed of wire shift m/min (speed of wire shift during welding).
- Time of switching off interval of welding voltage on arc opposite wire shift: „burning out" of wire towards the torch top.
- Time of post-gas after finishing welding process.

Table 4 - Range of value settings - **Machines PROCESSOR and SYNERGIC**

	the duration of the pre-gas	approach speed	wire feed rate rise time	wire feed speed	point time	lag time	burn out	post-gas time
	(s)	(m/min)	(s)	(m/min)	(s)	(s)	(s)	(s)
PROCESSOR 305, 405, 3500, 4100	0 - 3	-	0 - 5	1 - 20	0.5 - 5	0.2 - 2	0.0 - 0.99	0.1 - 10
SYNERGIC 305, 405	0 - 3	0.5 - 20	-	1 - 20	0.5 - 5	0,2 - 2	0.0 - 0.99	0.1 - 10

Setting PRE-GAS

Press button SET until you switch on LED marked in the picture.

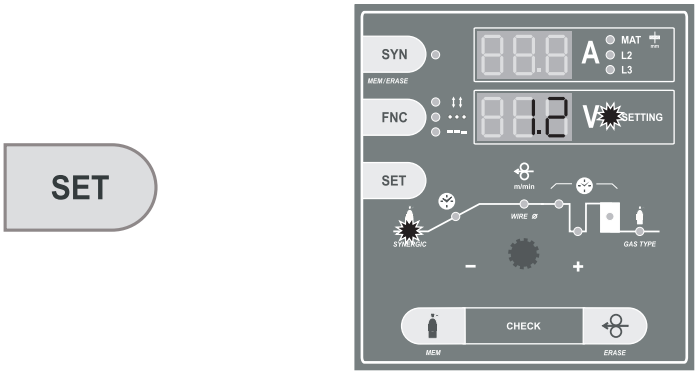

Use the potentiometer to set up required value of pre-gas time within sec.

Adjustment of wire burning out

Press button SET until you switch on LED marked in the picture.

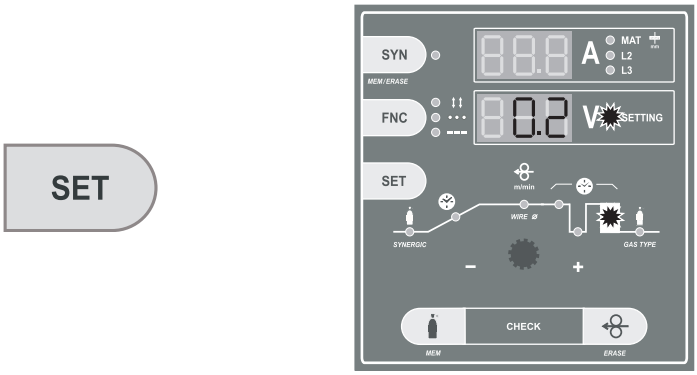

Use the potentiometer to set up required value of wire burning out within sec.

Setting of POST-GAS

Press button SET until you switch on LED marked in the picture.

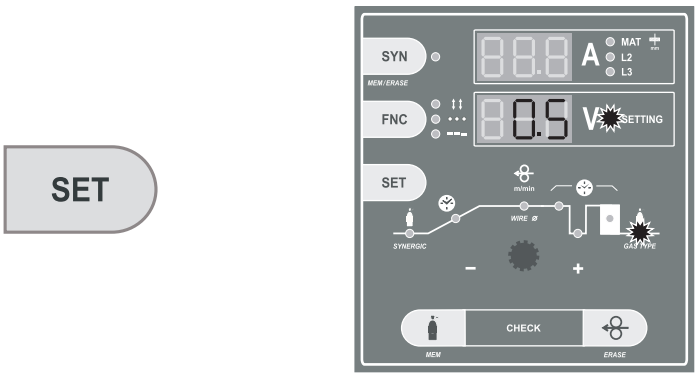

Use the potentiometer to set up required value of post-gas time 0-5 sec.

Adjustment of the start of wire speed - the function SOFT-START

Function SOFT-START secures an error-free start of the welding process. SOFT-START enables adjustment of the following parameters:

- the start time of welding wire speed from minimum speed up to adjusted welding speed
- approaching wire speed before welding arc ignition

Both the functions work in a different way. For a softer start approaching wire speed is recommended - the second option.

Adjustment - the start time of welding wire speed

Press the button SET until the LED is on, marked in the picture.

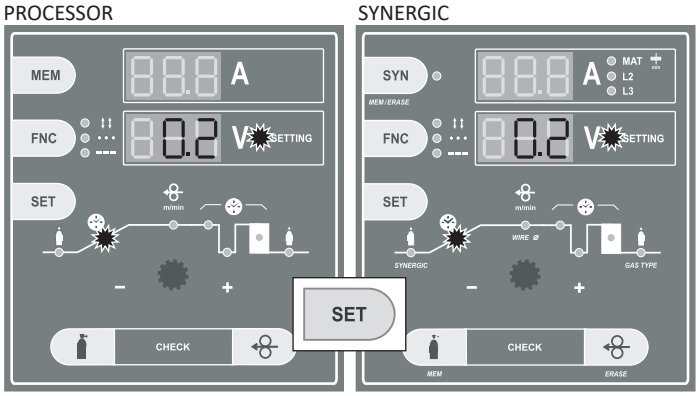

Adjust the required value of the start time of the wire speed shift with a potentiometer within the range of 0-5 sec.

Adjustment of the approaching wire speed shift

ATTENTION! Before adjusting the approaching speed of the wire, switch off the start time of the wire speed shift - set the value „0“.
Adjustment of the approaching speed - „the wire outlet“ is possible only when the function of the start time of wire speed is switched off - it means you have to set the value „0“ according to the description in the previous chapter.

Press the button SET until the LED is on, marked in the picture.

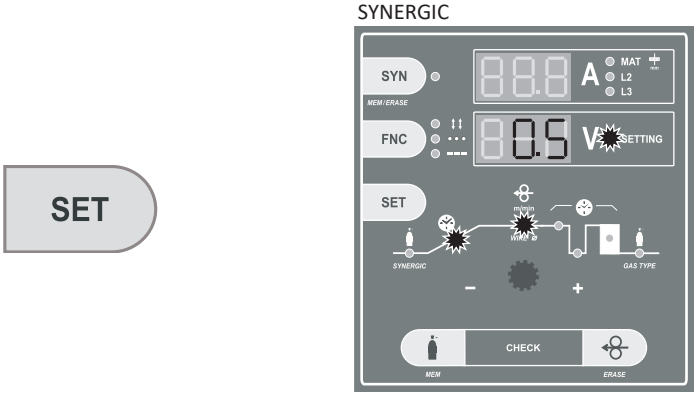

Adjust the required value of the approaching speed of the wire shift with a potentiometer within the range of 0,5 - 20 m/min.
NOTE 1: Adjusted values will be stored automatically in memory after pressing torch button for a period of about 1 sec.
NOTE 2: Set values can’t be changed during welding, except speed of wire shift.

Function factory configuration

Function factory configuration is used for initial setting of all parameters for controlling electronics. After you have used this function, all values will be adjusted automatically on values pre-set by producer like with a new machines. In other words, you restart controlling electronics.

Switch the main switch off. Press and hold button SET.

Switch the main switch on. Release button SET. Display shows values of initial adjustment.

Adjustment of welding mode

Controlling electronics of machines PROCESSOR and SYNERGIC enables welding in the following modes:

- Smooth two-stroke and four-stroke mode
- Spotting and pulse in two-stroke
- Spotting and pulse in four-stroke

Setting up two-stroke welding mode
Mode two-stroke is set up when the machine is switched off and there is no LED on such.

Setting two-stroke SPOTTING
Press button until you switch on LED SPOTTING in the picture.

Mode two-stroke spotting is adjusted.

Setting two-stroke PULSE
Press button until you switch on LED PULSE.

Mode two-stroke pulse is adjusted.

Setting SPOTTING time
Press button SET until you switch on LED marked in the picture.

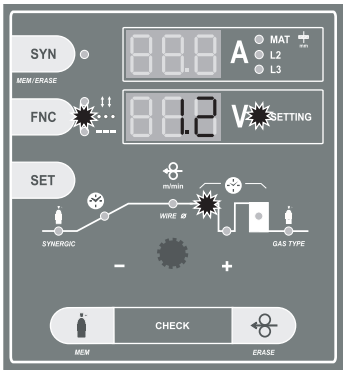

Use the potentiometer to set required value of spot time 0.5-5 sec.

Setting PULSE time
Press button SET until you switch on LED marked in the picture.

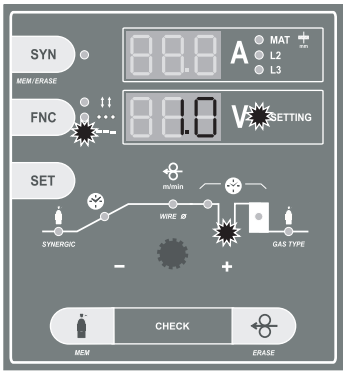

Use the potentiometer to set up required value of interval time between particular 0.2-2 sec.

Setting four-stroke welding mode
Press button FNC until you switch on LED.

Mode four-stroke is adjusted.

Setting four-stroke SPOTTING
Press button FNC until you switch on two LED four-stroke and SPOTTING in the picture.

Mode four-stroke spotting is adjusted.

Setting four-time PULSE mode
Press button FNC until you switch on two LED four-stroke and PULSE in the pic.

Mode four-stroke pulse is adjusted.

Function MEM (only with machines PROCESSOR)
Function enables back recall and display of last welding parameters for a period of about 7 sec.

Press button MEM

Display will show last measured values of welding voltage and current for 7 sec. Values can be recalled repeatedly.

Function SYNERGIC (only with machines SYNERGIC)
Function SYNERGIC simplifies operating and adjustment of welding parameters. Operating staff can specify type of program through a simple setting of gas type and wire diameter. To set welding parameters you can set simply and easily voltage with a switch and electronics will adjust speed of wire shift automatically.

Switching on function SYNERGIC
Press button SYN until you switch on LED SYN and LED material thickness.

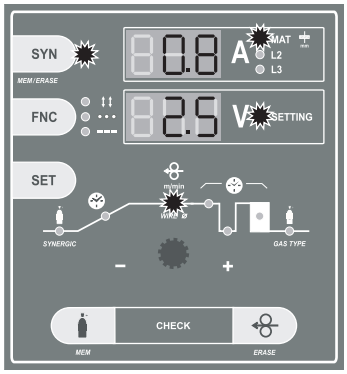

Function SYNERGIC is on.

Program choice - adjustment of wire diameter and gas type
Press button SET until you switch on LED marked in the picture.

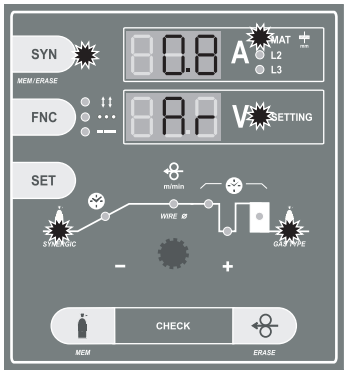

Using the potentiometer, you shall choose gas type you are going to apply - CO_2 or Ar (marks MIX argon and CO_2 gas in ratio 18 CO_2 and the rest Ar.

Press button SET until you switch on LED diode marked in picture.

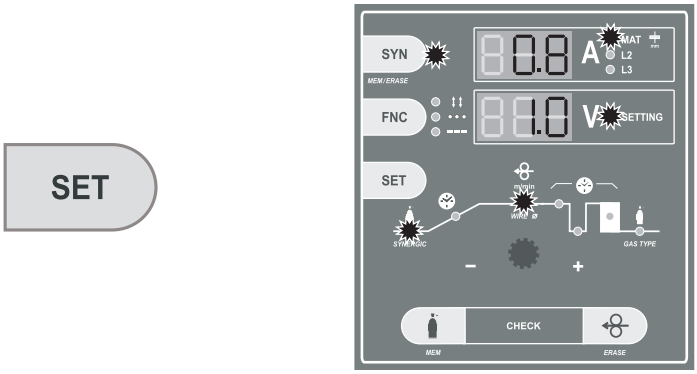

Use the potentiometer, thus you shall choose wire diameter SG2 you are going to use - 0.6 - 0.8 - 1.0 mm.
Approximate thickness of material possible to weld according to current adjustment will be shown on upper display. Currently adjusted speed of wire shift will be shown on bottom display, which is changed automatically when you change positions of voltage switch. Fall or rise in welding capacity is adjustted with a voltage switch.

Switching function SYNERGIC off

Press button SYN. Diode SYN and material thickness will switch off.

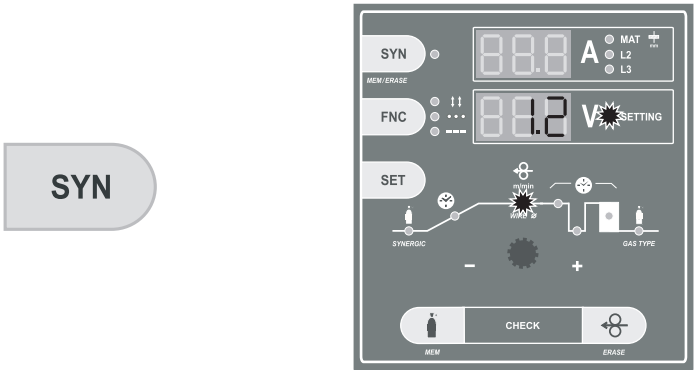

Function SYNERGIC is off.

NOTE 1: Shown values of material thickness are only approximate. Thickness of material can vary according to welding position etc.

NOTE 2: To correct parameter for wire shift, you shall use a potentiometer or buttons of remote control UP/DOWN.

NOTE 3: Parameters of the program synergic function are designed for copper coated wire SG2. In order to reach the correct function of the synergic programs, it is necessary to use quality wire, protective wire, gas and welding material.

NOTE 4: In order to reach the correct function of the synergic machine it is necessary to keep prescribed diameters of cables to wire diameters and the right die otherwise the correct function of the machine is not guaranteed. Further on, it is necessary to secure quality power supply – 400 V, max. ± 5%, connecting to ground of the welding material (use an earthing clip directly on the welding material).

Recorging own parameters of the speed of the wire shift into memory

The function of storing parameters is on only if the function synergic is on.
1. Choose the required speed of the wire shift.
2. Press and hold the button SYN and then.

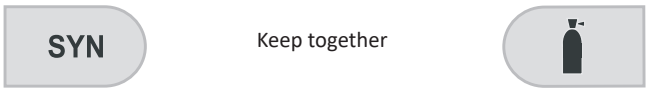

3. Release both the buttons - new parameters are stored.

All the required parameters can be stored and rewritten in this way as necessary. The recorded parameter is adjusted always in the same position of the voltage switch when the parameter was stored.

Return to the factory default settings

A return to original parameters SYNERGIC adjusted by the producer is done by the follow-up pressing and holding the button SYN and then pressing and releasing the button of wire threading. In such a way it is possible to return single parameters which have been stored. A total return of all the pre-adjusted values to the values set up by the producer can be done through the function factory configuration.

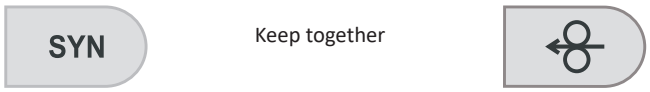

Function LOGIC (only with machines PROCESSOR and SYNERGIC)
Function LOGIC includes a file of simplifying and clarifying points which present adjusted and currently set values.
If two displays show a few different parameters, it is necessary to simplify presentation of parameters. Function LOGIC operates just in this way - it makes everything clear and distinct:

- Upper display switches on during welding process only when electronics makes measurements and shows welding current A (in case there is no mode SYNERGIC on. In case there is mode SYNERGIC on display is lit up constantly and only shown values change). After approx. 7 sec. display switches off automatically again. Thus electronics increases orientation while reading parameters during adjustment.
- Upper display shows only welding current. When function SYNERGIC is on (only with machines Synergic), upper display shows thickness of material.
- Bottom display shows welding voltage while welding and other values - time, speed etc. during adjustment.
- LED SETTING will switch off during welding process only when a digital voltampermeter is used.
- LED SETTING is on during welding only when operating staff is adjusting and changing speed of wire shift with a potentiometer or a remote control UP/DOWN. As soon as operating staff stops adjustment of a parameter, LED SETTING will be switched off automatically within 3 sec. and display shows value of welding voltage.

Recommended adjustment of welding parameters see charts on pg. 50 - 53.

Principle of MIG/MAG welding

Welding wire is lead from the roller into the flow drawing tie with the use of the feed. Arc joins thawing wire electrode with welding material. Welding wire functions as a carrier of the arc and as the source of additional material at the same time. Protective gas flows from the spacer which protects arc and the whole weld against the effects of surrounding atmosphere (pic. 6).

Picture 6

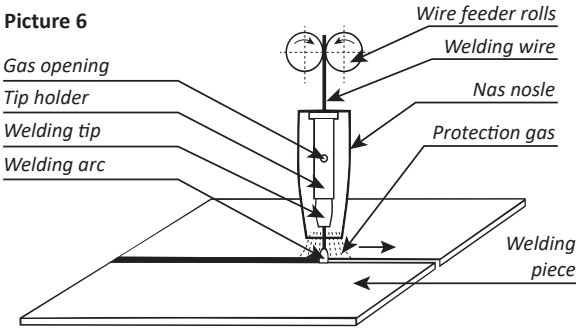

Protection gases

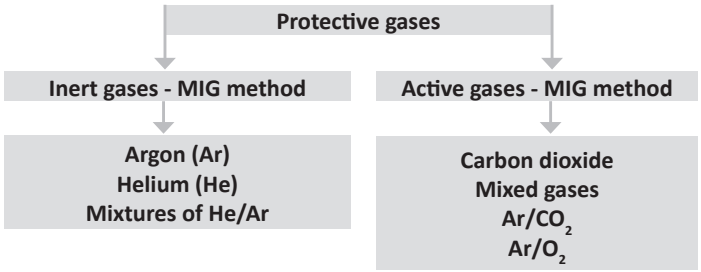

Principle of setting welding parameters

Guidance for setting welding current and voltage MIG / MAG corresponds to the empirical relationship U_2 = 14 + 0.05 x I2. According to this relationship, we can determine the necessary tension. When setting the voltage, it must be taken into account when it falls under the welding load. The voltage drop is about 4.8 V per 100 A.

The welding current is adjusted by adjusting the required welding current for the selected welding voltage by increasing or decreasing the wire feeding speed, or by fine-tuning the voltage until the welding arc is stable. To achieve a good weld quality and optimum welding current setting, the distance between the feed die and the material must be approximately 10 x Ø of the welding wire (pic. 6). Drowning the die in the gas nozzle should not exceed 2 - 3 mm.

Welding work cycles

Welding machines work in four working cycles:

- continuous two-stroke time
- continuous four-stroke time
- spot welding two-stroke time
- pulse welding two/four -stroke time

Two-stroke cycle

Welding process is started by only the pressing the switch of the torch. The switch must always be held during the welding process and it can be interrupted releasing the switch of the torch.

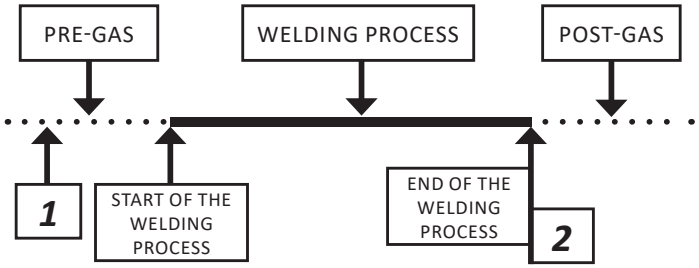

1 - Push and hold the switch of torch
2 - Release the switch of torch

Four-stroke cycle

It is used to weld long, when the welder does not have to hold the switch of the torch all the time. You will start the welding process in such a way. After releasing of the switch, the welding process still goes on. Only after a further pressing and releasing of the switch of the torch, the welding process is interrupted.

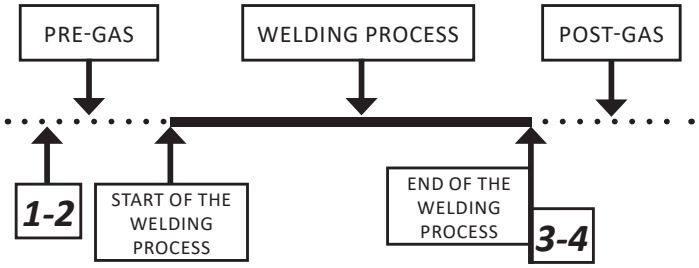

1-2 Push and hold the switch of torch
3-4 Release the switch of torch

Spot welding

It is used for welding by individual short spots, whose length can be continuously adjusted for required value. By pressing the switch on the torch, the time circuit is started, which starts the welding process and after the set time it turns off. After further pressing the button, the whole process is repeated.

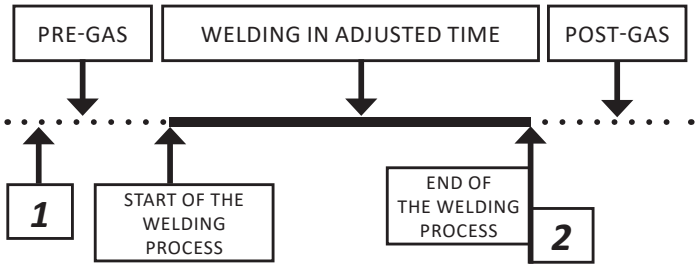

1 - Push and hold the switch of torch
2 - Release the switch of torch

Pulse welding

It is used for welding by short spots. Length of these spots and pauses can be continuously adjusted. By pressing the switch of the torch, time circuit is started, which starts the welding process and after certain time turns it off. After set pause, the whole activity is repeated. To interrupt the function, it is necessary to release the switch on the welding torch.

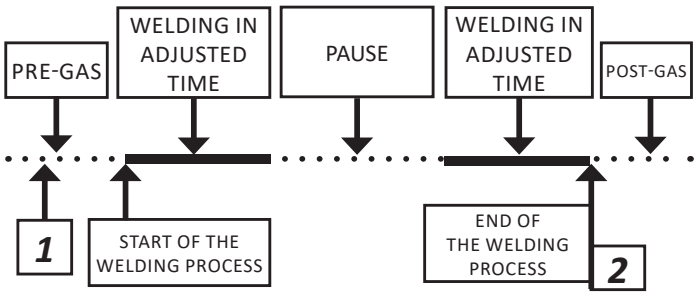

1 - Push and hold the switch of torch
2 - Release the switch of torch

Regular maintenance and inspections

Conduct the inspections according to the relevant Standard EN 60974-4. Before any use of the apparatus, check the conditions of the welding and power supply cables. Do not use damaged cables!

Visual inspections include:

1. Torch, welding current return clamp
2. Power supply network
3. Welding circuit
4. Covers
5. Controlling and indicating elements
6. Apparatus condition in general

The pointing out of any difficulties and their elimination

The supply line is attributed with the cause of the most common difficulties. In the case of breakdown, proceed as follows:

1. Check the value of the supply voltage
2. Check that the power cable is perfectly connected to the plug and the supply switch
3. Check that the power fuses are not burned out or loose
4. Check whether the following are defective:

- The switch that supplies the machine
- The plug socket in the wall
- The generator switch

NOTE: Given the required technical skills necessary for the repair of the generator, in case of breakdown we advise you to contact skilled personnel or our technical service department.

Ordering spare parts

For easy ordering of spare parts mention:

1. The order number and name of the part
2. The type of the machine or welding torch
3. Supply voltage and frequency from rating plate
4. Serial number of the machine

Grafické symboly na výrobním štítku / Grafické symboly na výrobnom štítku / Rating plate symbols
Grafischen Symbole auf dem Datenschild / Symbole graficzne na tabliczce produkcyjnej

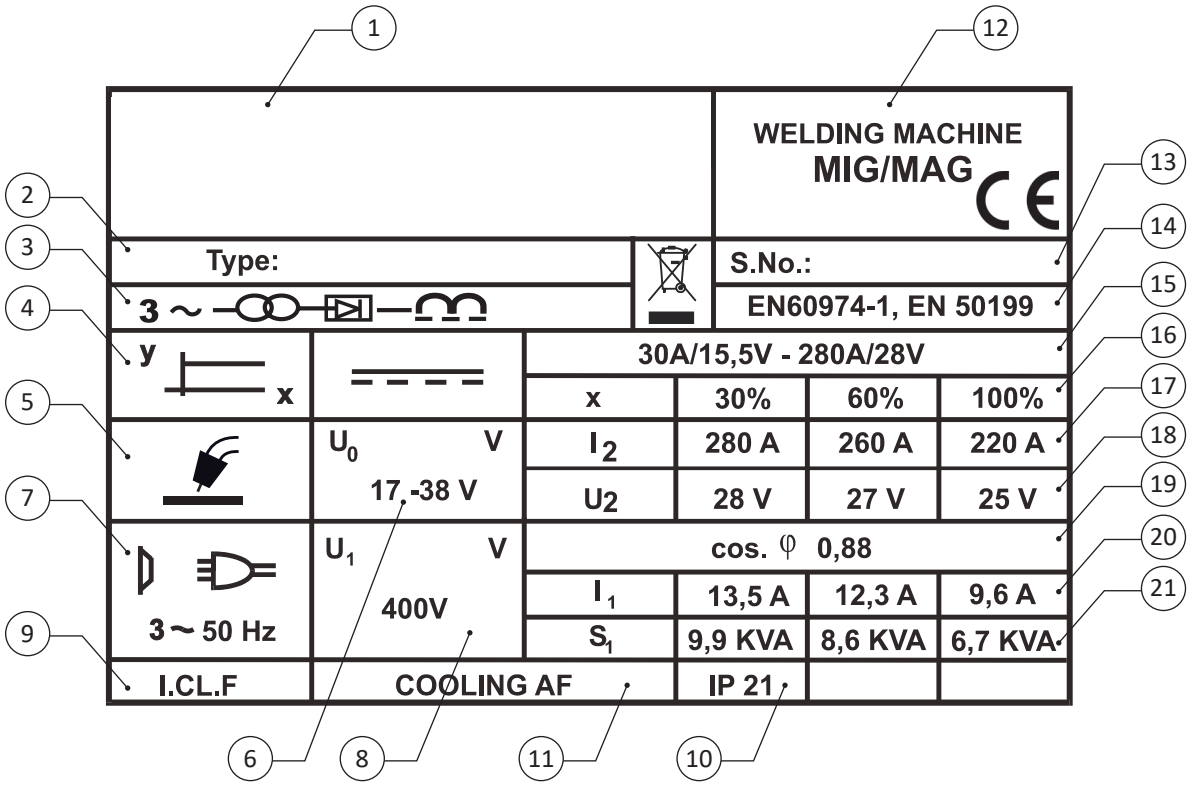

	CZ - popis	SK - popis	EN - description	DE - Beschreibung	PL - Opis
1	Jméno a adresa výrobce	Meno a adresa výrobcu	Name and address of the manufacturer	Name und Adresse des Herstellers	Nazwa i adres producenta
2	Typ stroje	Typ stroja	Type of machine	Maschinentyp	Rodzaj maszyny
3	Trojfázový usměrněný zdroj	Trojfázový usmernený zdroj	Three phase input	Gerichtete Dreiphasenquelle	Trójfazowe zasilanie z prostowni-kiem
4	Zdroj s plochou charakteristikou	Zdroj s plochou charakteristikou	MIG/MAG characteristic of welding	Quelle mit flacher Charakteristik	Źródła o charakterystyce płaskiej
5	Stroj pro svařování v ochranné atmosféře MIG/MAG	Stroj pre zváranie v ochrannej atmosfére MIG/MAG	MIG/MAG power source	Maschine zum MIG-/MAG - Schweißen in der Schutzgasatmosphäre	Maszyna do spawani w atmosferze ochronnej MIG/MAG
6	Jmenovité napětí na prázdno	Rozsah zváracieho napätia	Open circuit voltage	Schweißspannungsbereich	Napięcie nominalne i frekwencja zasilania
7	Napájení	Počet fáz	Power supply	Anzahl Phase	Ilość fazy
8	Jmenovité napájecí napětí	Menovité napájacie napätie	Supply voltage	Nennspeisespannung und Frequenz	Napięcie nominalne i frekwencja zasilania
9	Třída izolace	Trieda izolácie	Insulation class	Isolierungsklasse	Klasa izolacji
10	Krytí	Krytie	Protection degree	Schutzart	Stopień ochrony
11	Chlazení ventilátorem	Chladenie ventilátorom	Air-cooled	Ventilatorkühlung	Chłodzenie wentylatorem
12	Svařovací poloautomat MIG/MAG	Zvárací poloautomat MIG/MAG	Welding machine MIG/MAG	Schweißhalbautomat MIG/MAG	Półautomat spawalniczy MIG/MAG
13	Výrobní číslo	Výrobné číslo	Serial number	Produktionsnummer	Numer produkcyjny
14	Normy	Normy	Standards	Norm	Normy
15	Rozsah svařovacího napětí a proudů	Zváracie napätie pri zaťažení vyznačeným prúdom	Welding voltage/current range	Schweißspannung bei der Belastung mit dem gekennzeichneten Strom	Zakres napięcia spawalniczego
16	Zatěžovatel	Doba zaťaženia	Duty cycle	Belastungsdauer	Czas obciążenia
17	Jmenovitý svařovací proud	Menovitý zvárací prúd	Welding current	Nennschweißstrom	Nominalny prąd spawalniczy
18	Normalizované jmenovité napětí	Menovité napätie	Nominal voltage	Nennspannung	Nominalne napięcie
19	Účiník	Účiník	Power factor	Leistungsfaktor	Współczynnik mocy
20	Jmenovitý napájecí proud	Vstupný prúd	Supply current	Ausgangsstrom	Prąd wejściowy
21	Instalovaný výkon	Inštalovaný výkon	Power capacity	Installierte Leistung	Instalowana moc

Doporučené nastavení svařovacích parametrů
Odporúčané nastavenie zváracích parametrov
Recommended adjustment of welding parameters
Orientierungsmäßige Einstellung der Schweißparameter
Zalecane ustawienie parametrów spawalniczych

PROCESSOR + SYNERGIC - 305

Program No. 1 305 - 0.6-CO_2

	A	A	A	A	A	A	A	A	A	A	B	B	B	B	B	B	B	B	B	B
	1	2	3	4	5	6	7	8	9	10	1	2	3	4	5	6	7	8	9	10
m/min	-	-	2,5	3,0	3,8	4,5	6,2	6,6	7,5	9,4	-	-	-	-	-	-	-	-	-	-
	-	-	0,8	0,8	1,0	1,5	2,0	3,0	4,0	5,0	-	-	-	-	-	-	-	-	-	-
Orientační doporučené hodnoty ostatních parametrů / Reference advisory values of other parameters / Orientačné odporúčané hodnoty ostatných parametrov Empfohlene Richtwerte der anderen Parameter / Orientacyjne zalecane wartości pozostałych parametrów																				
	-	-	0,5	0,5	0,5	0,5	0,5	0,5	0,5	0,5	-	-	-	-	-	-	-	-	-	-
Tlumivka/Choke	-	-	1	1	1	1	1	1	1	1	-	-	-	-	-	-	-	-	-	-
Výlet/Starting from feeder	-	-	0,2	0,2	0,2	0,2	0,2	0,2	0,2	0,2	-	-	-	-	-	-	-	-	-	-
	-	-	0,3	0,3	0,3	0,3	0,3	0,3	0,3	0,3	-	-	-	-	-	-	-	-	-	-
	-	-	1,0	1,0	1,0	1,0	1,0	1,0	1,0	1,0	-	-	-	-	-	-	-	-	-	-

Program No. 2 305 - 0.6-MIX

	A	A	A	A	A	A	A	A	A	A	B	B	B	B	B	B	B	B	B	B
	1	2	3	4	5	6	7	8	9	10	1	2	3	4	5	6	7	8	9	10
m/min	3	3,5	3,9	4,5	5,4	7,1	8,5	9,4	10,3	11,9	-	-	-	-	-	-	-	-	-	-
	0,8	1	1,5	2	2,5	3	3,5	4	5	6	-	-	-	-	-	-	-	-	-	-
Orientační doporučené hodnoty ostatních parametrů / Reference advisory values of other parameters / Orientačné odporúčané hodnoty ostatných parametrov Empfohlene Richtwerte der anderen Parameter / Orientacyjne zalecane wartości pozostałych parametrów																				
	0,5	0,5	0,5	0,5	0,5	0,5	0,5	0,5	0,5	0,5	-	-	-	-	-	-	-	-	-	-
Tlumivka/Choke	1	1	1	1	1	1	1	1	1	1	-	-	-	-	-	-	-	-	-	-
Výlet/Starting from feeder	0,2	0,2	0,2	0,2	0,2	0,2	0,2	0,2	0,2	0,2	-	-	-	-	-	-	-	-	-	-
	0,3	0,3	0,3	0,3	0,3	0,3	0,3	0,3	0,3	0,3	-	-	-	-	-	-	-	-	-	-
	1,0	1,0	1,0	1,0	1,0	1,0	1,0	1,0	1,0	1,0	-	-	-	-	-	-	-	-	-	-

Program No. 3 305-0.8 - CO_2

	A	A	A	A	A	A	A	A	A	A	B	B	B	B	B	B	B	B	B	B
	1	2	3	4	5	6	7	8	9	10	1	2	3	4	5	6	7	8	9	10
m/min	2,4	2,6	2,7	2,7	2,8	3,1	3,2	3,4	3,8	5,3	6,0	7,4	10,0	11,1	11,8	12,8	13,8	14,7	16,0	17,5
	0,8	1,0	1,2	1,5	1,8	2,0	3,0	3,5	4,0	4,5	5,0	6,0	7,0	8,0	9,0	10	11	12	13	14
Orientační doporučené hodnoty ostatních parametrů / Reference advisory values of other parameters / Orientačné odporúčané hodnoty ostatných parametrov Empfohlene Richtwerte der anderen Parameter / Orientacyjne zalecane wartości pozostałych parametrów																				
	0,5	0,5	0,5	0,5	0,5	0,5	0,5	0,5	0,5	0,5	0,5	0,5	0,5	0,5	0,5	0,5	0,5	0,5	0,5	0,5
Tlumivka/Choke	1	1	1	1	1	1	1	1	1	1	1	1	1	2	2	2	2	2	2	2
Výlet/Starting from feeder	0,3	0,3	0,3	0,3	0,3	0,3	0,3	0,3	0,3	0,3	0,6	0,6	0,6	0,6	0,6	1,0	1,0	1,0	1,0	1,0
	0,3	0,3	0,3	0,3	0,3	0,3	0,3	0,3	0,3	0,3	0,3	0,3	0,3	0,3	0,3	0,3	0,3	0,3	0,3	0,3
	1	1,0	1,0	1,0	1,0	1,0	1,0	1,0	1,0	1,0	1,0	1,0	1,0	1,0	1,0	1,0	1,0	1,0	1,0	1,0

Program No. 4 305 - 0.8-MIX

	A	A	A	A	A	A	A	A	A	A	B	B	B	B	B	B	B	B	B	B
	1	2	3	4	5	6	7	8	9	10	1	2	3	4	5	6	7	8	9	10
m/min	2,5	2,9	3,4	4,1	5,4	6,5	7,5	9,0	9,7	10,4	10,6	11,4	12,7	13,5	14,4	15,4	17,5	18,8	20,0	-
	0,8	1,0	1,5	2	2,5	3	3,5	4	4,5	5	6	7	8	9	10	11	12	13	14	-
Orientační doporučené hodnoty ostatních parametrů / Reference advisory values of other parameters / Orientačné odporúčané hodnoty ostatných parametrov Empfohlene Richtwerte der anderen Parameter / Orientacyjne zalecane wartości pozostałych parametrów																				
	0,5	0,5	0,5	0,5	0,5	0,5	0,5	0,5	0,5	0,5	0,5	0,5	0,5	0,5	0,5	0,5	0,5	0,5	0,5	-
Tlumivka/Choke	1	1	1	1	1	1	1	1	1	1	1	1	1	2	2	2	2	2	2	-
Výlet/Starting from feeder	0,3	0,3	0,3	0,3	0,3	0,3	0,3	0,3	0,6	0,6	0,6	0,6	0,6	0,6	0,6	0,6	0,6	0,6	0,6	-
	0,3	0,3	0,3	0,3	0,3	0,3	0,3	0,3	0,3	0,2	0,2	0,2	0,2	0,2	0,2	0,2	0,2	0,2	0,2	-
	1	1	1	1	1	1	1	1	1	1	1	1	1	1	1	1	1	1	1	-

Program No. 5 305 - 1,0-CO_2

	A	A	A	A	A	A	A	A	A	A	B	B	B	B	B	B	B	B	B	B
	1	2	3	4	5	6	7	8	9	10	1	2	3	4	5	6	7	8	9	10
m/min	1,7	1,8	2,1	2,3	2,5	2,5	2,6	2,7	2,9	3,3	4,0	5,0	5,7	6,8	7,6	9,0	9,8	11,3	13,0	13,9
	0,8	1	1,5	1,8	2,0	2,5	3,0	3,2	3,5	4,0	4,5	5,0	6,0	7,0	8,0	9,0	10	11	12	13
Orientační doporučené hodnoty ostatních parametrů / Reference advisory values of other parameters / Orientačné odporúčané hodnoty ostatných parametrov Empfohlene Richtwerte der anderen Parameter / Orientacyjne zalecane wartości pozostałych parametrów																				
	0,5	0,5	0,5	0,5	0,5	0,5	0,5	0,5	0,5	0,5	0,5	0,5	0,5	0,5	0,5	0,5	0,5	0,5	0,5	0,5
Tlumivka/Choke	1	1	1	1	1	1	1	1	1	1	1	1	1	1	1	2	2	2	2	2
Výlet/Starting from feeder	0,3	0,3	0,3	0,3	0,3	0,3	0,3	0,3	0,3	0,3	0,3	0,3	0,3	0,3	0,3	0,3	0,3	0,3	0,3	0,3
	0,3	0,3	0,3	0,3	0,3	0,3	0,3	0,3	0,3	0,3	0,3	0,3	0,3	0,3	0,3	0,3	0,3	0,3	0,3	0,3
	1	1	1	1	1	1	1	1	1	1	1	1	1	1	1	1	1	1	1	1

Program No. 6 305 - 1,0-MIX																				
	A	A	A	A	A	A	A	A	A	A	B	B	B	B	B	B	B	B	B	B
	1	2	3	4	5	6	7	8	9	10	1	2	3	4	5	6	7	8	9	10
m/min	2,6	3,4	3,6	3,8	4,4	4,8	5,3	5,8	6,6	7,4	7,6	8,1	8,6	9,1	10	10,8	11,6	13	14,1	15,5
	0,8	1	1,5	1,8	2	3	4	5	6	7	8	9	10	11	12	13	14	15	16	17
Orientační doporučené hodnoty ostatních parametrů / Reference advisory values of other parameters / Orientačné odporúčané hodnoty ostatných parametrov Empfohlene Richtwerte der anderen Parameter / Orientacyjne zalecane wartości pozostałych parametrów																				
	0,5	0,5	0,5	0,5	0,5	0,5	0,5	0,5	0,5	0,5	0,5	0,5	0,5	0,5	0,5	0,5	0,5	0,5	0,5	0,5
Tlumivka/Choke	1	1	1	1	1	1	1	1	1	1	1	1	1	1	1	2	2	2	2	2
Výlet/Starting from feeder	0,3	0,3	0,3	0,3	0,3	0,3	0,3	0,3	0,3	0,3	0,3	0,3	0,3	0,3	0,3	0,3	0,3	0,3	0,3	0,3
	0,3	0,3	0,3	0,3	0,3	0,3	0,3	0,3	0,3	0,3	0,25	0,25	0,25	0,2	0,2	0,15	0,15	0,15	0,15	0,15
	1	1	1	1	1	1	1	1	1	1	1	1	1	1	1	1	1	1	1	1

Program No. 7 305 - 1,2-CO_2																				
	A	A	A	A	A	A	A	A	A	A	B	B	B	B	B	B	B	B	B	B
	1	2	3	4	5	6	7	8	9	10	1	2	3	4	5	6	7	8	9	10
m/min	2,6	2,6	2,7	2,7	2,8	2,8	2,8	2,9	3,1	3,4	3,6	4,2	4,8	5,6	6,2	7,3	8,4	9,8	10,9	12,6
	1	1,5	2	2,5	3	4	5	6	6,5	7	7,5	8	8,5	9	9,5	10	10	11	12	13
Orientační doporučené hodnoty ostatních parametrů / Reference advisory values of other parameters / Orientačné odporúčané hodnoty ostatných parametrov Empfohlene Richtwerte der anderen Parameter / Orientacyjne zalecane wartości pozostałych parametrów																				
	0,5	0,5	0,5	0,5	0,5	0,5	0,5	0,5	0,5	0,5	0,5	0,5	0,5	0,5	0,5	0,5	0,5	0,5	0,5	0,5
Tlumivka/Choke	1	1	1	1	1	1	1	1	1	1	1	1	1	1	1	2	2	2	2	2
Výlet/Starting from feeder	0,2	0,2	0,2	0,2	0,2	0,2	0,2	0,2	0,2	0,2	0,2	0,2	0,2	0,2	0,2	0,2	0,2	0,2	0,2	0,2
	0,3	0,3	0,3	0,3	0,3	0,3	0,3	0,3	0,3	0,3	0,3	0,3	0,3	0,3	0,3	0,3	0,3	0,3	0,3	0,3
	1	1	1	1	1	1	1	1	1	1	1	1	1	1	1	1	1	1	1	1

Program No. 8 305 - 1,2-MIX																				
	A	A	A	A	A	A	A	A	A	A	B	B	B	B	B	B	B	B	B	B
	1	2	3	4	5	6	7	8	9	10	1	2	3	4	5	6	7	8	9	10
m/min	1,6	2,7	2,7	2,9	3,3	4,0	4,6	5,7	6,0	6,1	6,2	6,4	6,5	6,8	7,1	7,1	8,8	10,4	10,8	12,2
	1	1,5	2	2,5	3	4	5	6	6,5	7	7,5	8	8,5	9	9,5	10	10	11	12	13
Orientační doporučené hodnoty ostatních parametrů / Reference advisory values of other parameters / Orientačné odporúčané hodnoty ostatných parametrov Empfohlene Richtwerte der anderen Parameter / Orientacyjne zalecane wartości pozostałych parametrów																				
	0,5	0,5	0,5	0,5	0,5	0,5	0,5	0,5	0,5	0,5	0,5	0,5	0,5	0,5	0,5	0,5	0,5	0,5	0,5	0,5
Tlumivka/Choke	1	1	1	1	1	1	1	1	1	1	1	1	1	1	1	2	2	2	2	2
Výlet/Starting from feeder	0,2	0,2	0,2	0,2	0,2	0,2	0,2	0,2	0,2	0,2	0,2	0,2	0,2	0,2	0,2	0,6	0,6	0,6	0,6	0,6
	0,3	0,3	0,3	0,3	0,3	0,3	0,3	0,3	0,3	0,3	0,3	0,3	0,3	0,3	0,3	0,15	0,15	0,15	0,15	0,15
	1	1	1	1	1	1	1	1	1	1	1	1	1	1	1	1	1	1	1	1

PROCESSOR + SYNERGIC - 405

Program No. 3 405 - 0.8-CO_2																				
	A	A	A	A	A	A	A	A	A	A	B	B	B	B	B	B	B	B	B	B
	1	2	3	4	5	6	7	8	9	10	1	2	3	4	5	6	7	8	9	10
m/min	2,7	2,8	3,0	3,1	3,3	3,3	3,4	3,5	3,7	3,7	3,7	3,8	3,8	4,1	4,6	5,5	6,2	7,0	7,7	8,5
	0,8	1,0	1,2	1,5	1,8	2,0	2,5	3,0	3,1	3,3	3,4	3,6	3,8	4,0	4,5	5,0	5,5	6,0	6,5	7,0
Orientační doporučené hodnoty ostatních parametrů / Reference advisory values of other parameters / Orientačné odporúčané hodnoty ostatných parametrov Empfohlene Richtwerte der anderen Parameter / Orientacyjne zalecane wartości pozostałych parametrów																				
Tlumivka/Choke	1	1	1	1	1	1	1	1	1	1	1	1	1	1	1	1	1	1	1	1
Výlet/Starting from feeder	0	0	0	0	0	0	0	0	0,2	0,2	0,2	0,2	0,2	0,2	0,2	0,2	0,2	0,2	0,3	0,3
	0,3	0,3	0,3	0,3	0,3	0,3	0,3	0,3	0,3	0,25	0,25	0,25	0,25	0,25	0,25	0,25	0,25	0,2	0,2	0,2
	C	C	C	C	C	C	C	C	C	C	D	D	D	D	D	D	D	D	D	D
	1	2	3	4	5	6	7	8	9	10	1	2	3	4	5	6	7	8	9	10
m/min	9,3	10	10,9	12,5	14	15,7	16,4	17,6	18,5	20	-	-	-	-	-	-	-	-	-	-
	7,5	8,0	8,5	9,0	10	11	12	13	14	15	-	-	-	-	-	-	-	-	-	-
Orientační doporučené hodnoty ostatních parametrů / Reference advisory values of other parameters / Orientačné odporúčané hodnoty ostatných parametrov Empfohlene Richtwerte der anderen Parameter / Orientacyjne zalecane wartości pozostałych parametrów																				
Tlumivka/Choke	2	2	2	2	2	2	2	2	2	2	2	2	2	2	-	-	-	-	-	-
Výlet/Starting from feeder	0,3	0,3	0,3	0,3	0,3	0,3	0,5	0,5	0,5	0,5	-	-	-	-	-	-	-	-	-	-
	0,2	0,2	0,2	0,15	0,15	0,15	0,15	0,15	0,15	0,15	-	-	-	-	-	-	-	-	-	-

Program No. 4 405 - 0.8-MIX																				
	A	A	A	A	A	A	A	A	A	A	B	B	B	B	B	B	B	B	B	B
	1	2	3	4	5	6	7	8	9	10	1	2	3	4	5	6	7	8	9	10
m/min	2,9	2,9	3,4	3,7	4,5	5,2	5,5	5,7	6,0	6,2	6,5	6,8	7,1	7,7	8,2	8,8	9,5	10,6	11,5	12,0
	0,8	1,0	1,2	1,5	1,8	2,0	2,5	3,0	3,1	3,3	3,4	3,6	3,8	4,0	4,5	5,0	5,5	6,0	6,5	7,0
Orientační doporučené hodnoty ostatních parametrů / Reference advisory values of other parameters / Orientačné odporúčané hodnoty ostatných parametrov Empfohlene Richtwerte der anderen Parameter / Orientacyjne zalecane wartości pozostałych parametrów																				
Tlumivka/Choke	1	1	1	1	1	1	1	1	1	1	1	1	1	1	1	1	1	1	2	2
Výlet/Starting from feeder	0	0	0	0	0	0	0	0	0,2	0,2	0,2	0,2	0,2	0,2	0,2	0,2	0,2	0,2	0,3	0,3
	0,3	0,3	0,3	0,3	0,3	0,3	0,3	0,3	0,3	0,25	0,25	0,25	0,25	0,25	0,25	0,25	0,25	0,25	0,25	0,25
	C	C	C	C	C	C	C	C	C	C	D	D	D	D	D	D	D	D	D	D
	1	2	3	4	5	6	7	8	9	10	1	2	3	4	5	6	7	8	9	10
m/min	12,3	12,5	13	13,5	14	14,6	15	15,7	16,6	17,4	18,3	19,5	20	-	-	-	-	-	-	-
	7,5	8,0	8,5	9,0	10	11	12	13	14	15	16	17	18	-	-	-	-	-	-	-
Orientační doporučené hodnoty ostatních parametrů / Reference advisory values of other parameters / Orientačné odporúčané hodnoty ostatných parametrov Empfohlene Richtwerte der anderen Parameter / Orientacyjne zalecane wartości pozostałych parametrów																				
Tlumivka/Choke	2	2	2	2	2	2	2	2	2	2	2	2	2	-	-	-	-	-	-	-
Výlet/Starting from feeder	0,3	0,3	0,3	0,3	0,5	0,5	0,5	0,5	0,5	0,5	0,5	0,5	0,5	-	-	-	-	-	-	-
	0,2	0,2	0,2	0,2	0,2	0,2	0,15	0,15	0,15	0,15	0,15	0,15	0,15	-	-	-	-	-	-	-

Program No. 5 405 - 1,0-CO_2																				
	A	A	A	A	A	A	A	A	A	A	B	B	B	B	B	B	B	B	B	B
	1	2	3	4	5	6	7	8	9	10	1	2	3	4	5	6	7	8	9	10
m/min	1,6	1,6	1,7	1,9	1,9	1,9	20,	2,3	2,4	2,6	2,8	3,0	3,0	3,1	3,3	3,6	3,8	3,9	3,9	4,4
	0,8	1,0	1,0	1,2	1,5	1,6	1,8	2,1	2,5	2,6	2,7	2,8	2,9	3,0	3,5	3,8	4,0	4,5	4,8	5,0
Orientační doporučené hodnoty ostatních parametrů / Reference advisory values of other parameters / Orientačné odporúčané hodnoty ostatných parametrov Empfohlene Richtwerte der anderen Parameter / Orientacyjne zalecane wartości pozostałych parametrów																				
Tlumivka/Choke	1	1	1	1	1	1	1	1	1	1	1	1	1	1	1	1	1	1	1	2
Výlet/Starting from feeder	0	0	0	0	0,2	0,2	0,2	0,2	0,2	0,2	0,3	0,3	0,3	0,3	0,3	0,3	0,3	0,3	0,3	0,3
	0,3	0,3	0,3	0,3	0,3	0,3	0,3	0,3	0,3	0,3	0,25	0,25	0,25	0,25	0,25	0,25	0,25	0,25	0,25	0,25
	C	C	C	C	C	C	C	C	C	C	D	D	D	D	D	D	D	D	D	D
	1	2	3	4	5	6	7	8	9	10	1	2	3	4	5	6	7	8	9	10
m/min	5,0	5,9	6,6	7,4	8,1	8,2	8,9	9,3	10,4	11,7	13,8	14,9	16,3	16,9	17,5	18,1	18,6	19,1	19,7	20,0
	5,5	6,0	7,0	7,5	8,0	8,5	9,0	9,5	10,0	10,5	11,0	12,0	13,0	14,0	15,0	16,0	17,0	18,0	19,0	20,0
Orientační doporučené hodnoty ostatních parametrů / Reference advisory values of other parameters / Orientačné odporúčané hodnoty ostatných parametrov Empfohlene Richtwerte der anderen Parameter / Orientacyjne zalecane wartości pozostałych parametrów																				
Tlumivka/Choke	2	2	2	2	2	2	2	2	2	2	2	2	2	2	2	2	2	2	2	2
Výlet/Starting from feeder	0,5	0,5	0,5	0,5	0,5	0,5	0,5	0,5	0,5	0,5	0,5	0,5	0,5	0,5	0,5	0,5	0,5	0,5	0,5	0,5
	0,2	0,2	0,2	0,2	0,2	0,2	0,2	0,2	0,2	0,2	0,15	0,15	0,15	0,15	0,15	0,15	0,15	0,15	0,15	0,15

Program No. 6 405 - 1,0-MIX																				
	A	A	A	A	A	A	A	A	A	A	B	B	B	B	B	B	B	B	B	B
	1	2	3	4	5	6	7	8	9	10	1	2	3	4	5	6	7	8	9	10
m/min	2,1	2,2	3,0	3,7	4,2	4,2	4,4	4,6	4,6	4,8	5,0	5,3	5,3	5,7	6,1	6,5	6,9	7,2	7,8	8,5
	0,8	1,0	1,2	1,5	1,8	2,1	2,5	2,8	3,0	3,2	3,5	3,8	4,0	4,5	4,8	5,0	5,5	5,8	6,0	6,3
Orientační doporučené hodnoty ostatních parametrů / Reference advisory values of other parameters / Orientačné odporúčané hodnoty ostatných parametrov Empfohlene Richtwerte der anderen Parameter / Orientacyjne zalecane wartości pozostałych parametrów																				
Tlumivka/Choke	1	1	1	1	1	1	1	1	1	1	1	1	1	1	1	2	2	2	2	2
Výlet/Starting from feeder	0	0	0	0	0	0	0	0,3	0,3	0,3	0,3	0,3	0,3	0,3	0,3	0,3	0,3	0,3	0,3	0,5
	0,3	0,3	0,3	0,3	0,3	0,3	0,3	0,3	0,3	0,25	0,25	0,25	0,25	0,25	0,25	0,25	0,25	0,25	0,25	0,20
	C	C	C	C	C	C	C	C	C	C	D	D	D	D	D	D	D	D	D	D
	1	2	3	4	5	6	7	8	9	10	1	2	3	4	5	6	7	8	9	10
m/min	8,6	9,0	9,2	9,3	9,5	9,8	10,0	10,4	10,9	11,9	12,8	13,9	15,0	16,1	17,5	18,4	19,5	20	-	-
	6,5	6,8	7,0	7,5	8,0	8,5	9,0	9,5	10,0	11,0	12,0	13,0	14,0	15,0	16,0	17,0	18,0	19,0	-	-
Orientační doporučené hodnoty ostatních parametrů / Reference advisory values of other parameters / Orientačné odporúčané hodnoty ostatných parametrov Empfohlene Richtwerte der anderen Parameter / Orientacyjne zalecane wartości pozostałych parametrów																				
Tlumivka/Choke	2	2	2	2	2	2	2	2	2	2	2	2	2	2	2	2	2	2	-	-
Výlet/Starting from feeder	0,5	0,5	0,5	0,5	0,5	0,5	0,5	0,5	0,5	0,5	0,5	0,5	0,5	0,5	0,5	0,5	0,5	0,5	-	-
	0,20	0,20	0,20	0,20	0,20	0,20	0,15	0,15	0,15	0,1	0,1	0,1	0,1	0,1	0,1	0,1	0,1	0,1	-	-

Program No. 7 405 - 1,2-CO_2																				
	A	A	A	A	A	A	A	A	A	A	B	B	B	B	B	B	B	B	B	B
	1	2	3	4	5	6	7	8	9	10	1	2	3	4	5	6	7	8	9	10
m/min	1,7	2,4	2,8	3,5	3,5	3,5	3,7	3,7	3,8	3,9	3,9	4,0	4,1	4,3	4,3	4,6	5,3	5,3	5,7	5,8
	1,0	1,2	1,5	1,8	2,0	2,5	3,0	3,2	3,5	4,0	4,5	4,8	5,0	5,3	5,5	6,0	6,5	7,0	7,5	8,0
Orientační doporučené hodnoty ostatních parametrů / Reference advisory values of other parameters / Orientačné odporúčané hodnoty ostatných parametrov Empfohlene Richtwerte der anderen Parameter / Orientacyjne zalecane wartości pozostałych parametrów																				
Tlumivka/Choke	1	1	1	1	1	1	1	1	1	1	1	1	1	1	1	1	1	1	1	1
Výlet/Starting from feeder	0,5	0,5	0,5	0,5	0,5	0,5	0,5	0,5	0,5	0,5	0,7	0,7	0,7	0,7	0,7	0,7	0,7	0,7	0,7	0,7
	0,3	0,3	0,3	0,3	0,3	0,3	0,3	0,3	0,3	0,3	0,3	0,3	0,3	0,25	0,25	0,25	0,25	0,25	0,25	0,25
	C	C	C	C	C	C	C	C	C	C	D	D	D	D	D	D	D	D	D	D
	1	2	3	4	5	6	7	8	9	10	1	2	3	4	5	6	7	8	9	10
m/min	5,8	6,1	6,4	6,8	7,3	7,7	8,0	8,1	8,5	8,7	9,6	10,1	11,3	12,7	13,8	14,5	15,5	16,6	18,2	20,0
	8,5	9,0	9,5	10,0	10,5	11,0	12,0	13,0	14,0	15,0	16,0	17,0	18,0	19,0	20,0	21,0	22,0	23,0	24,0	25,0
Orientační doporučené hodnoty ostatních parametrů / Reference advisory values of other parameters / Orientačné odporúčané hodnoty ostatných parametrov Empfohlene Richtwerte der anderen Parameter / Orientacyjne zalecane wartości pozostałych parametrów																				
Tlumivka/Choke	2	2	2	2	2	2	2	2	2	2	2	2	2	2	2	2	2	2	2	2
Výlet/Starting from feeder	0,7	0,7	0,7	0,7	0,7	0,7	0,7	0,7	0,7	0,7	0,7	0,7	0,7	0,7	0,7	0,7	0,7	0,7	0,7	0,7
	0,2	0,2	0,2	0,2	0,2	0,2	0,2	0,2	0,2	0,2	0,2	0,2	0,2	0,2	0,2	0,2	0,2	0,2	0,2	0,2

Program No. 8 405 - 1,2-MIX																				
	A	A	A	A	A	A	A	A	A	A	B	B	B	B	B	B	B	B	B	B
	1	2	3	4	5	6	7	8	9	10	1	2	3	4	5	6	7	8	9	10
m/min	1,7	1,9	2,7	3,9	4,0	4,1	4,4	4,5	4,9	5,0	5,5	5,6	5,9	6,4	6,8	6,9	7,1	7,7	8,3	9,2
	1,0	1,5	2,0	2,2	2,5	3,0	3,5	4,0	4,5	5,0	5,2	5,5	5,8	6,0	6,5	6,8	7,0	7,5	7,8	8,0
Orientační doporučené hodnoty ostatních parametrů / Reference advisory values of other parameters / Orientačné odporúčané hodnoty ostatných parametrov Empfohlene Richtwerte der anderen Parameter / Orientacyjne zalecane wartości pozostałych parametrów																				
Tlumivka/Choke	1	1	1	1	1	1	1	1	1	1	1	1	1	1	1	1	1	1	1	1
Výlet/Starting from feeder	0,5	0,5	0,5	0,5	0,5	0,5	0,5	0,5	0,5	0,7	0,7	0,7	0,7	0,7	0,7	0,7	0,7	0,7	0,7	0,7
	0,3	0,3	0,3	0,3	0,3	0,3	0,3	0,3	0,3	0,3	0,3	0,3	0,3	0,25	0,25	0,25	0,25	0,25	0,25	0,25
	C	C	C	C	C	C	C	C	C	C	D	D	D	D	D	D	D	D	D	D
	1	2	3	4	5	6	7	8	9	10	1	2	3	4	5	6	7	8	9	10
m/min	9,5	10,4	10,7	11,2	11,6	12,0	12,3	13,3	13,7	14,8	15,1	15,7	16,0	16,3	17,0	18,0	18,7	19,4	20,0	-
	8,2	8,5	8,8	9,0	9,3	9,5	10,0	10,5	11,0	11,5	12,0	13,0	14,0	15,0	16,0	17,0	18,0	19,0	20,0	-
Orientační doporučené hodnoty ostatních parametrů / Reference advisory values of other parameters / Orientačné odporúčané hodnoty ostatných parametrov Empfohlene Richtwerte der anderen Parameter / Orientacyjne zalecane wartości pozostałych parametrów																				
Tlumivka/Choke	1	1	1	1	1	2	2	2	2	2	2	2	2	2	2	2	2	2	2	-
Výlet/Starting from feeder	0,7	0,7	0,7	0,7	0,7	0,7	0,7	0,7	0,7	0,7	0,7	0,7	0,7	0,7	0,7	0,7	0,7	0,7	0,7	-
	0,2	0,2	0,2	0,2	0,2	0,2	0,2	0,2	0,2	0,2	0,2	0,2	0,2	0,2	0,2	0,2	0,2	0,2	0,2	-

Porovnávací tabulka stupnice rychlosti posuvu drátů strojů STANDARD (m/min) / Comparing chart with scales of wire shift speed of machines STANDARD (m/min) Porovnávacia tabuľka stupnice rýchlosti posuvu drôtu strojov STANDARD (m/min) / Comparing chart with scales of wire shift speed STANDARD (m/min) Tabela porównująca skale szybkości podajnika drutów maszyn STANDARD (m/min)											
Stupnice potenciometru / Scale of potentiometer Skala potencjometru / Potentiometer – Skala / Skala potencjometru	**1**	**2**	**3**	**4**	**5**	**6**	**7**	**8**	**9**	**10**	**11**
Orientační hodnoty v m/min. / Reference values in m/min. Wartości orientacyjne w m/min. / Richtwerte in m/Min. Wartości orientacyjne w m/min.	4	5,8	11,5	15	18	20,5	23	23,5	24	24,5	25

Elektrotechnické schéma / Elektrotechnické schéma / Electrical diagram / Schema / Schemat elektrotechniczny

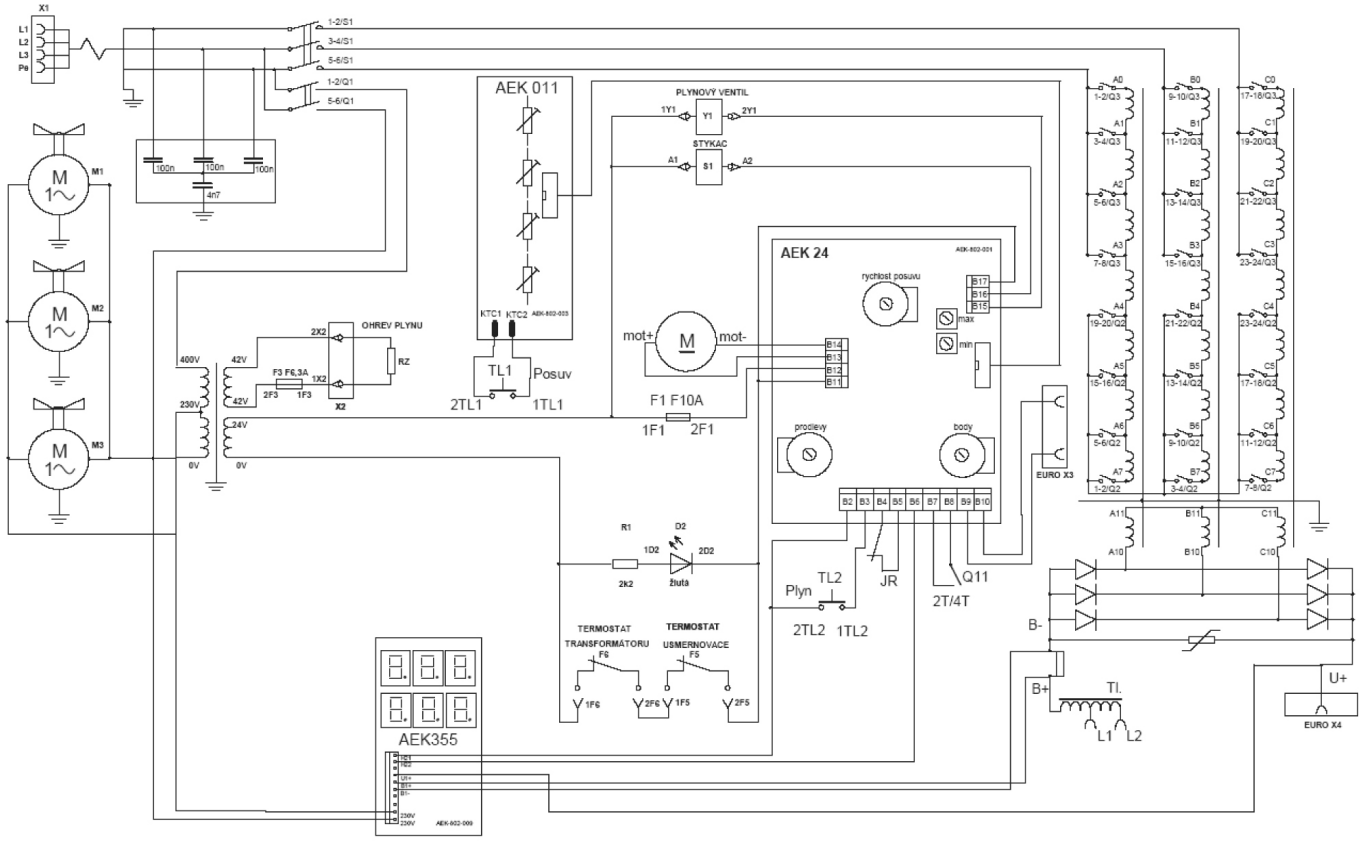

305 - 405 - 3500 - 4100 STANDARD

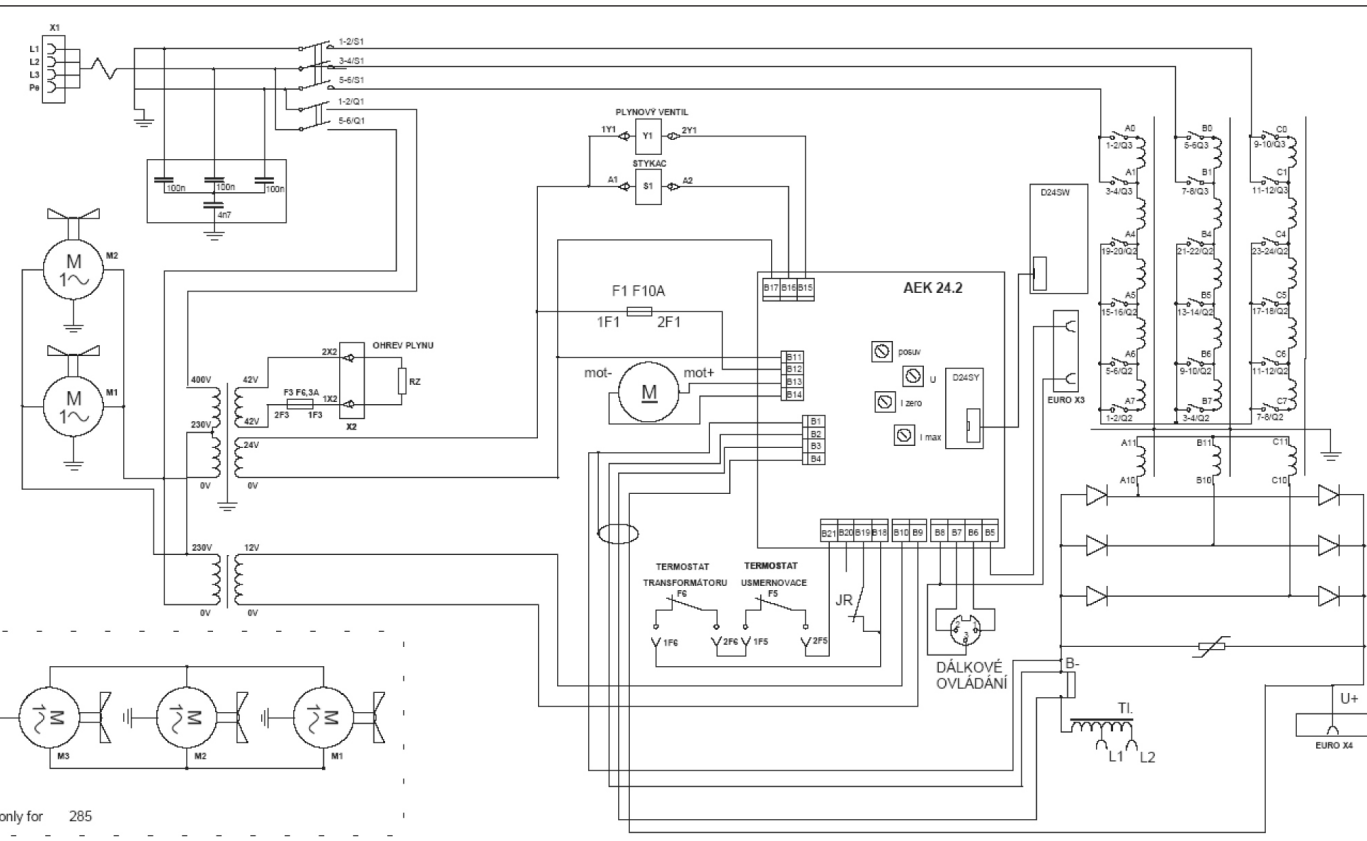

305 - 405 PROCESSOR - SYNERGIC

Seznam náhradních dílů / Zoznam náhradných dielov / List of spare parts
Ersatzteilliste / Lista części zamiennych maszyn

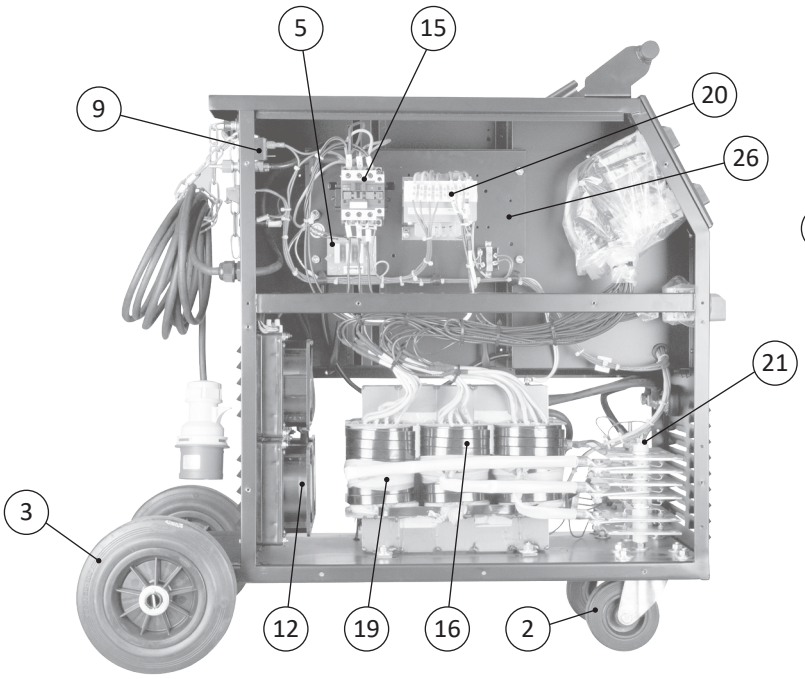

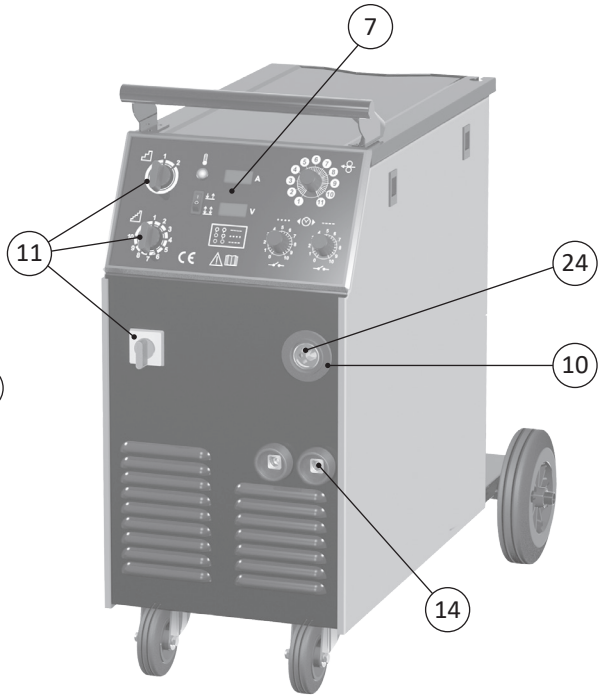

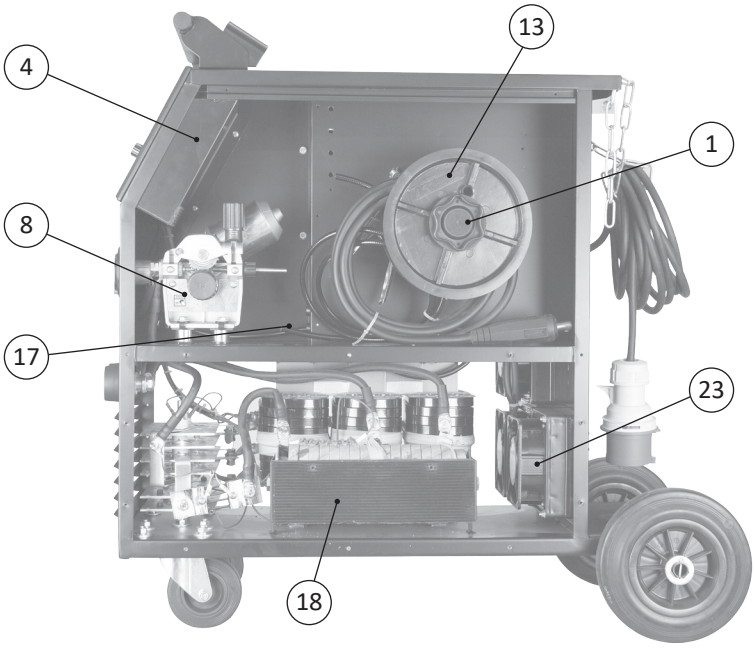

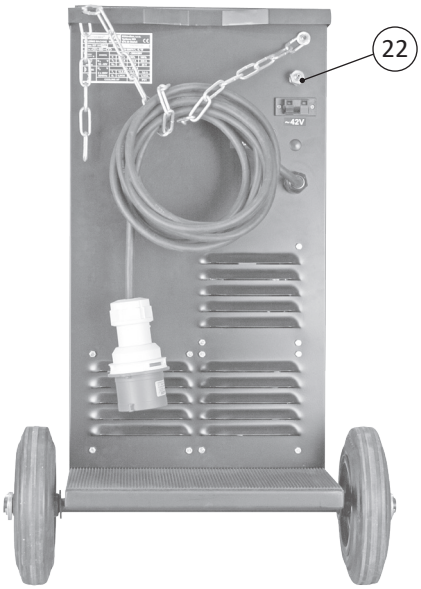

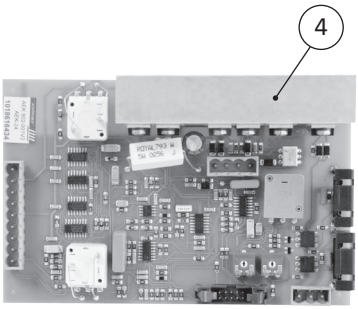

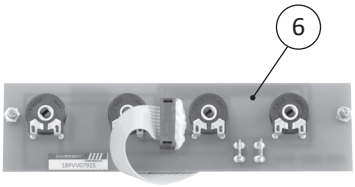

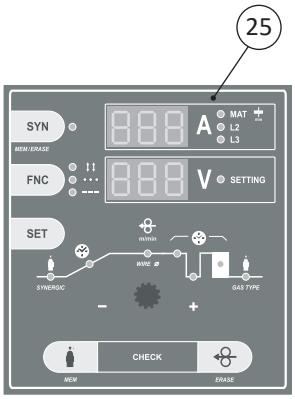

	CZ - náhradní díly	SK - náhradné diely	EN - spare parts	Varianta / Variant	No.
1	Držák cívky AEK-COOP standard	Držiak cievky AEK-COOP standard	Holder of spool AEK-COOP standard		30009
2	Kolo otočné	Kolo otočné 180-354	Wheel diameter 180-354		30036
3	Kolo pevné	Kolo 205-456 pevné	Wheel diameter 205-354		31255
4	PCB AEK-24	PCB AEK-24	PCB AEK-24		10186
4	PCB AEK-242	PCB AEK-242	PCB AEK-242	PROCESSOR/SYNERGIC	10470
5	PCB AEK-801-003	PCB AEK-801-003	PCB AEK-801-003		10413
6	PCB AEK-802-003	PCB AEK-802-003	PCB AEK-802-003		10350
7	PCB KUH 357 DIGITAL MINUS	PCB KUH 357 DIGITAL MINUS	PCB KUH 357 DIGITAL MINUS	STANDARD	12075
8	Posuv 4-kl. velký + motor velký	Posuv 4-kl. veľký + motor velký	Feeder 4-roll big + motor big	4100	10115
8	Posuv 2-kl. velký + motor malý	Posuv 2-kl. veľký + motor malý	Feeder 2-roll big + motor small		10149
8	Posuv 4-kl. velký + motor malý	Posuv 4-kl. veľký + motor malý	Feeder 4-roll big + motor small		10189
9	Pouzdro pojistkové PTF 70	Puzdro poistkové PTF 70	Protection case PTF 70		30075
10	Průchodka zásuvky EURO	Priechodka zásuvky EURO	Euro connector grommet		33476
11	Přepínače primárních vodičů	Prepínače primárnych vodičov	Switches of primary conductors	305/3500	10473
11	Přepínače primárních vodičů	Prepínače primárnych vodičov	Switches of primary conductors	405/4100	10474
11	Přepínače primárních vodičů	Prepínače primárnych vodičov	Switches of primary conductors	305 SYNERGIC	10509
11	Přepínače primárních vodičů	Prepínače primárnych vodičov	Switches of primary conductors	405 SYNERGIC	10557
12	Rámeček ventilátoru Sunon	Rámček ventilátora Sunon	Fan border NT Sunon	305/405	30512
13	Redukce cívky adaptér AEK	Redukcia cievky adaptér AEK	Adaptor AEK		30096
14	Rychlo zásuvka panel 35-50 šestihran	Rychlo zásuvka panel 35-50 šestihran	Gladhand - socker panel 35-50		30423
15	Stykač 32 A	Stykač 32 A	Contactor 32 A		31000
16	Termostat 130 °C EAW 229	Termostat 130 °C EAW 229	Thermostat 130 °C EAW 229		31088
17	Tlačítko 3 A červené	Tlačítko 3 A červené	Button 3 A red		30223
18	Tlumivka Al	Tlmivka AL	Inductor AL	305	10087
18	Tlumivka Cu	Tlmivka 350 Cu	Inductor Cu	405	10154
19	Trafo hlavní	Trafo hlavní	Transformer	305	10875
19	Trafo hlavní	Trafo hlavní	Transformer	405	10880
19	Trafo hlavní Cu/Al	Trafo hlavní Cu/Al	Transformer Cu/Al	3500	11492
19	Trafo hlavní Cu/Al	Trafo hlavní Cu/Al	Transformer Cu/Al	4100	11493
20	Trafo ovládací	Trafo ovládací	Transformer operating		10894
21	Usměrňovač PTS 350	Usměrňovač PTS 350	Rectifier PTS 350		30168
22	Ventil plynový 24 V s filtrem ZCQ-20B-8	Ventil plynový 24 V s filtrem ZCQ-20B-8	Gas valve 24 V with filter ZCQ-20B-8		32313
23	Ventilátor Sunon	Ventilátor Sunon	Fan Sunon	305	30451
23	Ventilátor UF20JC23-H	Ventilátor UF20JC23-H	Fan UF20JC23-H	4100	30733
23	Ventilátor UF12A23SWH	Ventilátor UF12A23SWH	Fan UF12A23SWH	405	30750
24	Zásuvka EURO komplet	Zásuvka EURO komplet, kr.	Euro connector complete, short	305/3500	10092
24	Zásuvka EURO komplet	Zásuvka EURO kopmplet	Euro connector complete	405/4100	10308
25	Samolepka čelní panel	Samolepka čelný panel	Sticker front panel	305/405 PROCESSOR	31360
25	Samolepka čelní panel	Samolepka čelný panel	Sticker front panel	305D/405 SYNERGIC	31827
26	Trafo napájecí	Trafo napájacie	Power transformer	305/405 PROCESSOR/SYNERGIC	31507
-	Relé jazýčkové ORD225	Relé jazýčkové ORD225	Dry - reed relay ORD225		20192

EN - Trouble shooting

Warning: machine can repair only competed and educated personal!

Symptom	Reason	Resolution
The fan is not running, welding machine does not work.	1/ Is the machine connected to the network?	Connect the machine into the network.
	2/ Is voltage in the socket?	You must check the socket.
	3/ Is not the wire released from the clamp in the plug or socket?	Check the socket or the plug.
	4/ Main switch is damaged.	Exchange the main switch.
	5/ Loose cabel from clamp in the machine.	Fix the cabel.
	6/ The control trnsformer is without voltage - the phase is missing.	Check the socket, the plug and main power cable.
	7/ Defective control transformer.	Change the control transformer.
The fan is not running.	The fan is broken.	Exchange the fan.
The fan is working, welding machine does not work.	A/ CONTACTOR DOES NOT SWITCH - THE FEED DOES NOT WORK	
	1/ Euro connector is not connected to the torch.	Connect the euro connector to the torch.
	2/ Damaged switch or control cabel in the torch.	Disconnect the torch and two contacts of the bridge for controling. If all function of the machine are working, exchange the switch, cabel or whole torch.
	3/ On the controling transformer is not voltage - the phase are missing.	Exchange the fuse, check the switch, plug and main cabel, check the phase on the contactor.
	4/ Defective coil contactor.	Exchange the contactor.
	5/ Defective thermostats (see diagram).	Exchange the thermostats.
	B/ CONTACTOR IS SWITCHING, FEED DOES NOT WORK	
	1/ Defective control electronics.	Exchange the board.
	2/ Defective motor feed.	Exchange the motor feed.
	C/ CONTACTOR IS SWITCHING, FEED WORKS	
	1/ Broken ground cable	Isolation does not need to be damaged, so it is not clear - exchange the ground cabel.
	2/ Damaged torch of coaxial cable.	Exchange the coaxial cable.
On the nozzle torch is welding current.	1/ On the nozzle torch is accumulated spatter.	Takeoff the nozzle and clean it, as same as clean the between piece and girder, spray the parts by separation spray.
	2/ Isolation nozzle is damaged.	Take off the nozzle.
It is not possible to regulate speed of the feeding.	1/ Loose knob of regulation speed of the feed.	Tighten the knob of regulation speed of the feed.
	2/ Damaged potenciometer.	Exchange the potenciometer.
	3/ Damaged control electronics.	Exchange the board.
The gas is still leaking by torch.	1/ Dirt on the valve.	Do the disassembly and purifying or exerts tension on the spring or exchange the valve.
	2/ Incorrectly set pressure reducing valve cylinder.	Set the pressure.
	3/ It is used inappropriate throttle valve.	Use appropriate reducing valve.
	4/ Damaged electromagnetic valve.	Exchange electromagnetic valve.
Badly welds – it's sticking, scorching, shaking, large spatter.	A/ BAD PASSING OF THE WIRE THROUGH THE WELDING TORCH OR DRAWING DIE	
	1/ Drawing die is too imbedded under the edge of the orifice.	Drawing die can be imbedded only 1 – 2 mm under the edge of the orifice.
	2/ The diameter of the opening of the drawing die does not correspond to the used wire.	Change tip for corresponding one.
	3/ Tip is very dirty.	Clean or change the tip.
	4/ Tip is worn out.	Change the tip.
	5/ The spring in the welding torch is too short or too long.	Change the spring.
	6/ The spring of appropriate diameter has not been used.	Change the spring.
	7/ Dirty spring.	Clean the spring – it has to be cleaned every week.
	8/ Sheave for different diameter of wire.	Release the thrust of the shift sheave.
	9/ Shift sheave is worn out.	Clap on the sheave which corresponds to the used diameter of the wire.
	10/ Spool of the wire is being too intensely braked.	Release the screw of the spool brake.
	B/ OTHER CAUSES	
	1/ Fallen-out phase.	Try to connect the machine to some other circuit breaker. Change the fuse, check the socket, the plug and the flexing cable. Check if thee are on the clamp of el. transformer after switching of welding torch all 3 phases A0 connected B0 400 V, A0 400 V and B0 connected C0 400 V – only three phase machines. While measuring with welding machines with the alternation switch of rough voltage always in A position. ATTENTION!, if 1 phase falls out, only voltage of about 230 V appears, there is voltage on the clamp! Right voltage, however, is 400 V - defect is in the contactor or in the socket or released wire on the clamp.
	2/ Wrongly adjusted working point.	Check the voltage and the speed of wire feed.
	3/ Wrong grounding.	Check the contact between grounding pliers and the work piece. Change the grounding cable.
	4/ Wrong rectifier.	Change the rectifier.
	5/ Low - quality gas or wire.	Use different wire or gas.
	6/ Faulty alteration switch of the currency.	Change the alteration switch.
	7/ Faulty circuits.	Change the el. transformer.
	8/ Burnt wired between el. transformer and the alteration switch of the currency.	Replace the faulty circuit.

The wire is unregularly fed.	1/ Worn out sheave - the wire is slipping.	Change the sheave.
	2/ Appropriate diameter of the sheave has not been used.	Change the sheave.
	3/ Faulty motor - worn-out carbons or faulty retch.	Change the carbons, the retch or the whole motor.
	4/ Rubbed-in upper sheave.	Change the upper pulley.
	5/ The spring of the appropriate diameter has not been used.	Change the spring.
	6/ Dirty spring.	Clean the spring - the spring has to be cleaned every week.
	7/ Thrust on the shift is too tight - the wire is being misshapen.	Release the thrust of the shift sheave.
	8/ Sheave for some other diameter of the wire.	Clap on the sheave which corresponds to the used diameter of the wire.
	9/ Sheave of the feed is worn out.	Replace the sheave with a new one.
	10 The spool of the wire is being too intensely braked.	Release the spool brake.
The el. transformer is making very strong grumbling noise, warming up and scorching.	1/ Damaged alteration switch of the currency.	Change the alteration switch.
	2/ Damaged secondary rolling of the transformer.	Change the transformer.
	3/ Damaged primary rolling of the transformer.	Change the transformer.
	4/ Short circuit on the rectifier or the efferent.	Remove the cause of the short circuit.
Welding wire is red--hot in the welding torch, on the sheave of the feed and the power cable is being warmed up.	1/ The spool or the wire is touching the machine case.	Flatten the misshapen parts of the spool in order that they do not touch the machine case.
	2/ Metal dirt connect the body of the feed with the case of the welding machine.	Clean the space of the feed from all dirt.
	3/ The rectifier is touching the case of the machine.	Avoid the contact of the body of the rectifier and the case of the machine.
Gas does not go through the welding machine.	1/ Clogged gas hose in the welding torch.	Make sure if the right inner diameter of the spring has been used, try to clap on a different welding torch or change coaxial cable or the whole welding torch.
	2/ The valve is without voltage.	Change the panel of controlling electronics.
Porous welding point.	1/ Gas is not on or the compressed gas cylinder is empty.	Turn gas on or connect a new full compressed gas cylinder.
	2/ Too strong draught in the working place.	Increase the flow of the shielding/protective gas or avoid draught.
	3/ Material is destroyed by rust, paint or oil.	Purify the material well.
	4/ The orifice of the drawing die is dirty from the spatter.	Remove the spatter and spray the orifice with separating spray.
	5/ The welding torch is too far from the material.	Hold the welding torch from the material in such a distance which equals 10 times bigger than the diameter of used welding wire.
	6/ Too small or too big flow of the gas.	Adjust the flow of the gas on the appropriate values.
	7/ Hose connections do not seal.	Check if all hose connections seal.
Welding wire forms a loop between the sheaves and the opening of the capillary of the welding torch.	1/ The opening of drawing die (point of the welding torch) is too narrow, does not correspond to the diameter of the used welding wire.	Change the drawing die and use the right one.
	2/ Pressure on the flattening sheave is too big.	Release the flattening sheave of the feed.
	3/ Dirty or damaged spring in the welding torch.	Clean the spring - the spring has to be cleaned every week or change it.
	4/ The spring in the welding torch is suitable for some other diameter of the welding wire.	Change the drawing die for a suitable one.

DE - Handbuch für die Störungsbeseitigung

Hinweis: Die Maschine können nur qualifizierte und entsprechend geschulte Mitarbeiter reparieren!

Defekt, Anzeichen	Grund	Lösung
Ventilator läuft nicht Schweißmaschine schweißt nicht.	1/ Ist die Maschine an das Netz geschaltet?	Maschine an das Netz schalten.
	2/ Gibt es in der Steckdose Spannung?	Netzsteckdose überprüfen.
	3/Ausgefallenes Draht aus der Klemmleiste des Steckers oder Steckdose?	Netzstecker oder -dose überprüfen.
	4/ Hauptschalter ist beschädigt.	Hauptschalter austauschen.
	5/ Ausgefallenes Kabel aus der Klemmleiste in der Maschine.	Kabel befestigen.
	6/ Kleines Trafo bleibt ohne Spannung - Phase ausgefallen.	Steckdose, Stecker und Netzzuleitungskabel überprüfen.
	7/ Steuerungstrafo defekt.	Steuerungstrafo austauschen.
Ventilator läuft nicht.	Ventilator defekt.	Ventilator austauschen.
Ventilator läuft, Schweißmaschine schweißt nicht.	A/ SCHÜTZ SCHALTET NICHT - VORSCHUB FUNKTIONIERT NICHT	
	1/ Steuerungsstecker des Brenners nicht angeschlossen.	Steuerungsstecker des Brenners anschließen.
	2/Schalter oder Steuerungskabel im Brenner defekt.	Brenner frei schalten, zwei Kontakte für die Steuerung überbrücken Falls alle Maschinenfunktionen in Ordnung sind, den Schalter, das Koaxialkabel oder den ganzen Brenner austauschen.
	3/ Am Kleintrafo keine Spannung - eine Phase ausgefallen.	Netzsicherung austauschen, Steckdose, Stecker und Zuleitungsnetzkabel überprüfen, Phasen am Schütz kontrollieren.
	4/ Schütz - Spule defekt.	Schütz austauschen.
	5/ Thermostaten defekt (siehe Schema).	Thermostaten austauschen.
	B/ SCHÜTZ SCHALTET - VORSCHUB FUNKTIONIERT NICHT	
	1/Steuerungselektronik defekt.	Platte austauschen.
	2/Vorschubmotor defekt - Kohlenstifte.	Vorschub - Kohlenstifte austauschen.
	B/ SCHÜTZ SCHALTET, VORSCHUB FUNKTIONIERT	
	1/ Erdungskabel gebrochen.	Die Isolierung muss nicht beschädigt sein - es ist nicht sichtbar - das Erdungskabel austauschen.
	2/ Koaxialkabel des Brenners defekt.	Koaxialkabel austauschen.

Osvědčení o jakosti a kompletnosti výrobku / Osvedčenie o akosti a kompletnosti výrobku Testing certificate / Qualitätszerfifikat des Produktes / Deklaracja Jakości i Kompletności				
Název a typ výrobku Názov a typ výrobku Type Bennenung und Typ Nazwa i rodzaj produktu	◯ 305 ◯ STANDARD ◯ KIT	◯ 405 ◯ PROCESSOR ◯	◯ 3500 ◯ SYNERGIC	◯ 4100
Výrobní číslo stroje: Výrobné číslo: Serial number: Herstellungsnummer der Maschine: Numer produkcyjny maszyny:			Výrobní číslo PCB: Výrobné číslo PCB: Serial number PCB: Herstellungsnummer PCB: Numer produkcyjny PCB:	
Výrobce / Výrobca Producer / Produzent / Producent				
Razítko OTK Pečiatka OTK Stamp of Technical Control Department Stempel der technische Kontrollabteilung Pieczątka Kontroli Jakości				
Datum výroby / Dátum výroby Date of production / Datum der Produktion Data produkcji				
Kontroloval / Kontroloval Inspected by / Geprüft von Sprawdził				

Záruční list / Záručný list / Warranty certificate Garantieschein / Karta Gwarancyjna	
Datum prodeje / Dátum predaja Date of sale / Verkaufsdatum Data sprzedaży	
Razítko a podpis prodejce / Pečiatka a podpis predajca Stamp and signature of seller Stempel und Unterschrift des Verkäufers Pieczątka i podpis sprzedawcy	

Záznam o provedeném servisním zákroku / Záznam o prevedenom servisnom zákroku / Repair note Eintrag über durchgeführten Serviseingriff / Zapis o wykonaniu interwencji serwisowej			
Datum převzetí servisem Dátum prevzatia servisom Date of take-over Datum Übernahme durch Servisabteilung Data odbioru przez serwis	Datum provedení opravy Dátum prevedenia opravy Date of repair Datum Durchführung der Reparatur Data wykonania naprawy	Číslo reklamač. protokolu Číslo reklamač. protokolu Number of repair form Nummer des Reklamationsprotokoll Numer protokołu reklamacyj	Podpis pracovníka Podpis pracovníka Signature of serviceman Unterschrift von Mitarbeiter Podpis pracownika

09/2019