NÁVOD K OBSLUZE / SVAŘOVACÍ STROJ CZ

INSTRUCTION FOR USE / WELDING MACHINE EN

# SNÍMATELNÉ PODAVAČE DRÁTU
# REMOVABLE WIRE FEEDERS

## STANDARD - PROCESSOR - SYNERGIC

**MADE IN EU** CE

# ENGLISH

## Content



## Introduction

Dear customer, thank you for trusting and purchasing our product.

**Please read carefully before commissioning read all instructions in this manual.**

It is also necessary to study all safety regulations, which are included in the attached document General regulations.

For optimal and long-term use, you must follow the operating and maintenance instructions given here. In your interest, we recommend that you entrust maintenance and possible repairs to our service organization, as they have the appropriate equipment and specially trained staff. All our machines and equipment are subject to long-term development. Therefore, we reserve the right to modify their production and equipment.

## Description

These removable wire feeders are designed for welding power sources for MIG (Metal Inert Gas) and MAG (Metal Active Gas) methods. Equipped with a welding wire coil magazine and 2 or 4 wire feed rollers. The integrated control panel allows setting and control of the welding source. The case is provided with two fixed and two swivel wheels.

**Package contents**

- operating Instructions
- safety instructions
- wire feeder

## Design of machines

**Variant E -** plastic magazine for welding wire coil
**Variant P -** all-metal case design
**Variant W -** with circuit for liquid cooled torches

**Analog version STANDARD**

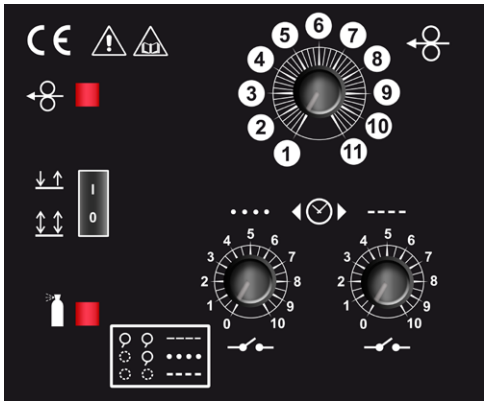

Simple and reliable machine control by one wire feed potentiometer and two other potentiometers with switch for switching on and setting the spoting and pulse functions. This version is equipped as standard with a digital volt-ampere meter.

**Digital version PROCESSOR**

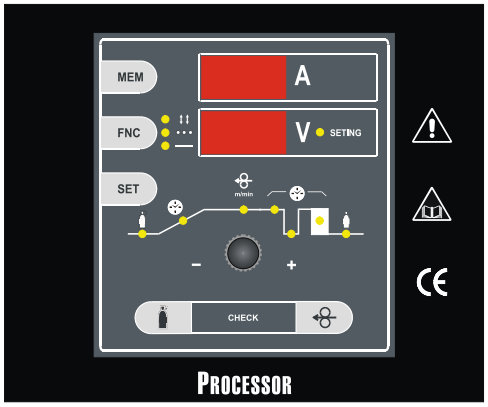


Simple solution for all MIG/MAG welding functions. All values are controlled and set by one potentiometer and two buttons. The LOGIC function contributes to simplicity of operation. The machines are equipped with a digital volt-ampere meter with memory. The control allows setting the values of pre-gas / post-gas, SOFT START function, wire burn-out, scoring and pulsation, two-stroke and four-stroke modes. Progressive wire feed. Electronic wire feed speed control with feed feed control ensures a constant set feed speed.

| Technical parameters | | 2-4 E W | 2-2 E / 2-4 E<br>2-2 E W / 2-4 E W | 2-2 P / 2-4 P<br>2-2 P W / 2-4 P W |
|---|---|---|---|---|
| Mains voltage 50 Hz | [ V ] | 24 | 24 | 24 |
| Protection | [ A ] | 10 | 10 | 10 |
| Welding current range | [ A ] | 30 - 700 | 30 - 700 | 30 - 700 |
| Wire feeder | - | 4 roll | 2/4 roll | 2/4 roll |
| Wire feed speed | [ m/min ] | 1 - 20 | 1 - 20 | 1 - 20 |
| Material of wire –<br>Steel, Stainless, Aluminium, Cored wire | - | yes | yes | yes |
| Protection class | - | IP 21 | IP 21 | IP 21 |
| Dimensions L-W-H | [ mm ] | 435 × 505 × 725 | 365 × 480 × 670 | 433 × 515 × 640 |
| Weight | [ kg ] | 20 | 17 | 20 |

**Digital version SYNERGIC**

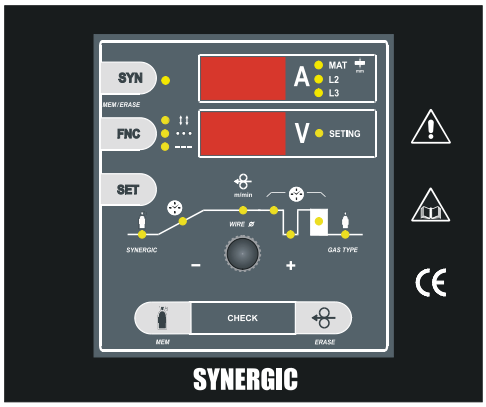


Significantly simplifies the setting of welding parameters. By simply adjusting the welding wire diameter and protective gas used, the operator determines the type of program. Then set the voltage with the switch and the Synergic control unit selects the most suitable wire speed parameters. For control and adjustment of all values serves one potentiometer and two buttons. The LOGIC function contributes to simplicity of operation. The machines are equipped as standard with a digital volt-ampere meter with memory. The control allows setting the values of pre-gas / post-gas, SOFT START function, wire burn-out, spoting and pulsation, two-stroke and four-stroke modes. Progressive wire feed. Electronic wire feed speed control with feed control ensures a constant feed rate.

### Equipment of machines

**The machines are standard equipped:**

- Rolls for wire diameters of 1.0 and 1.2 mm
- The accompanying documentation
- Reduction for 5 kg and 18 kg wire
- Two or four roll wire feeder

**Other accessories to order:**

- Reduction valves for $CO_2$ or Argon mixed gases
- Welding torches 3, 4 and 5 m long
- Spare rolls for different wire diameters
- Four roll wire feeder
- Connecting cables various lengths
- Wire straightener

## Installation

The installation site for the system should be carefully considered to ensure safe and in all respects satisfactory traffic. The user is responsible for installing and using the system in accordance with the manufacturer's instructions in this manual. The manufacturer is not liable for damage caused by improper use and operation. Machines must be protected from moisture and rain, mechanical damage, drafts and possible ventilation of neighboring machines, excessive overloading and rough handling. Before installing the system, the user should consider possible electromagnetic problems in the workplace, especially we recommend that you avoid installing the welding kit near:

• signal, control and telephone cables, radio and television transmitters and receivers
• computers, control and measurement equipment
• safety and protective equipment

When installing the device, the environment must comply with the protection level, ie IP 21 (IEC 529). This system is cooled by forced air circulation and must therefore be placed in a place where air can easily flow through the device.

## Connection of the feeder with the welding source

Make sure the main switch of the welding machine is in the „0“ position before starting. Connect each connector of the connecting cable to the respective quick couplings on the feeder and on the source as shown in the following picture.

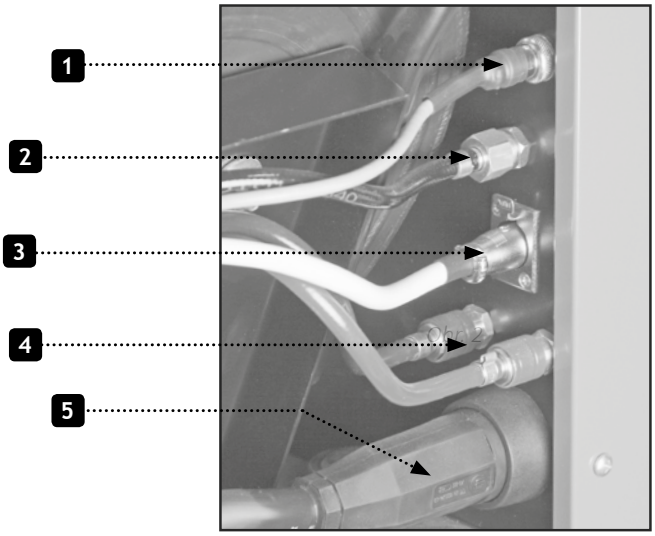


| | |
|---|---|
| Position 1 | Connector of synergic panel control (SYNERGIC only) |
| Position 2 | Gas valve |
| Position 3 | Connector 3-pin to power-suply the feeder control |
| Position 4 | Liquid cooling quick couplings (W only) |
| Position 5 | Power cable connection |

## Control elements

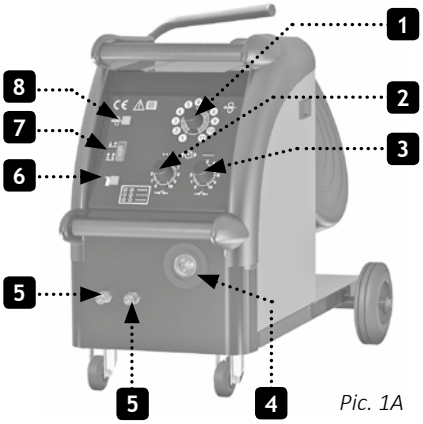


*Pic. 1A*

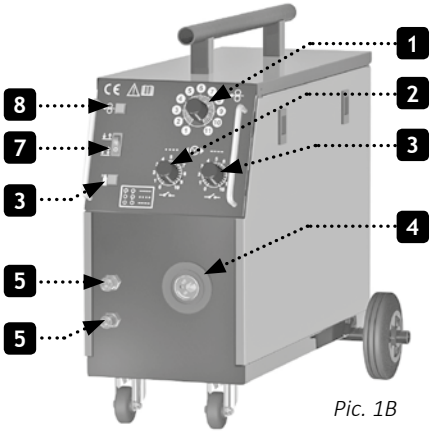


*Pic. 1B*

**Picture 1A, 1B**

| | |
|---|---|
| Position 1 | Wire feed speed adjustment potentiometer |
| Position 2 | Spot function switch with spot length potentiometer |
| Position 3 | Delay function switch / adjustment of delays between spots |
| Position 4 | Euro connector for torch connection |
| Position 5 | Connections liquid cooled torch |
| Position 6 | Gas test button |
| Position 7 | Two-stroke / four-stroke switch |
| Position 8 | Wire feed button |

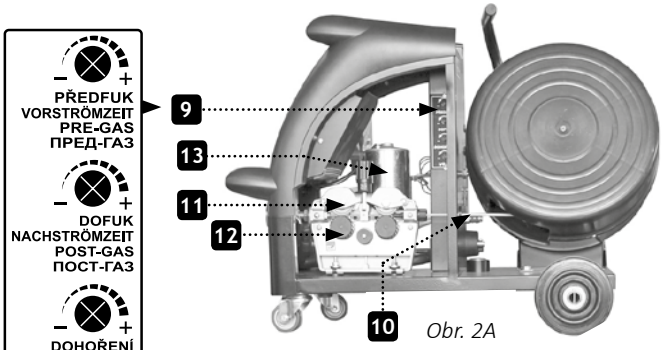


Obr. 2A

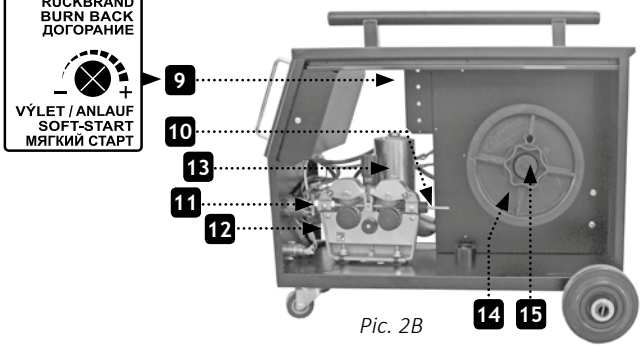


Pic. 2B

### Picture 2A, 2B

Position 9 Setting of potentiometers: (only Standard):

**Pre-gas** - setting the time interval of protective gas flow before start of welding process.

**Burning out** - setting the time interval of burning out of wire after the welding proces. The correct setting prevents welding wire from sticking and improves further arc ignition.

**Post-gas** - set the time interval of protecting gas flow after welding process to prevent oxidation of the weld end.

**Soft Start** - approach speed of wire - with the proper setup allows seamless ignition of the arc

Position 10 Loading bowden

Position 11 Euro connector insertion tube

Position 12 Four-rolls feed

Position 13 Wire feed electric motor

Position 14 Reduction of 15 kg wire spool

Position 15 Wire spool holder

### Digital control PROCESSOR

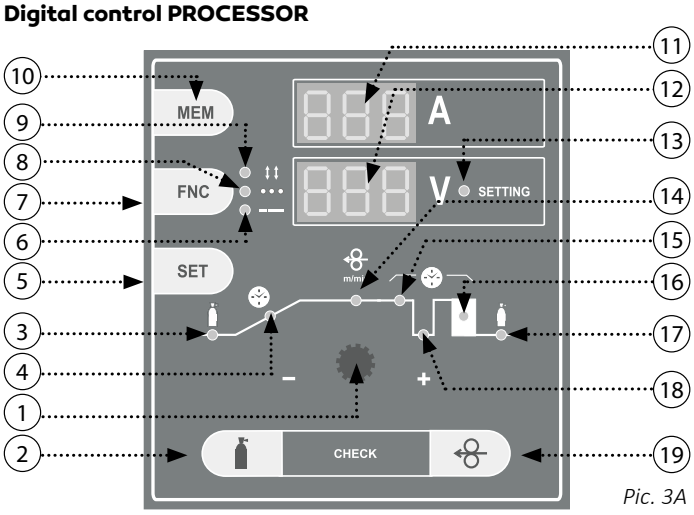


Pic. 3A

Position 1 Potentiometer setting parameters

Position 2 Button GAS TEST

Position 3 LED illustrating pre-gas

Position 4 LED illustrating start of speed of welding wire

Position 5 Button SET - it allows choosing setting parameters

Position 6 LED illustrates switching on of pulse function

Position 7 Button welding mode - it allows switching on and off of 2-stroke and 4-stroke modes, spot and pulse welding

Position 8 LED illustrating spot welding mode

Position 9 LED illustrating four-time welding mode

Position 10 Button MEM allows loading of values of voltage and welding current which were measured last time

Position 11 Display of welding current

Position 12 Display showing welding pressure and values with LED SETTING light up; They are values of speed of wire feeder, pre-gas etc

Position 13 LED SETTING which is on only when parameters are shown speed of wire feeder, start of wire, pre-gas and post-gas, spot time and pulse time, burning out of wire

Position 14 LED illustrating speed of shifting of welding wire

Position 15 LED illustrating spot time

Position 16 LED illustrating burnt out time

Position 17 LED illustrating post-gas time

Position 18 LED illustrating pulse time

Position 19 Button wire feeder

### Digital control SYNERGIC

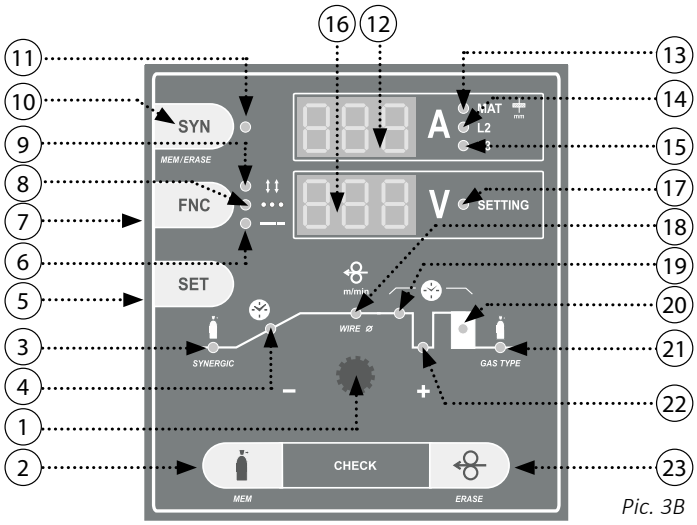


Pic. 3B

Position 1 Potentiometer setting parameters

Position 2 Button TEST GAS

Position 3 LED illustrating pre-gas

Position 4 LED illustrating start of speed of welding wire

Position 5 Button SET - it allows choosing setting parameters

Position 6 LED illustrates switching on of pulse function

Position 7 Button welding mode - it allows switching on and off of two--stroke and four-stroke modes, spot and pulse welding

Position 8 LED illustrating spot welding mode

Position 9 LED illustrating four-stroke welding mode

Position 10 Switch of synergic function - SYN on and off

Position 11 LED signalling switching synergic function on

Position 12 Display of welding current

Position 13 LED signalling approximate power values of welding material on display; when diode is off display shows value of welding current

Position 14 LED shows which outlet (on supported welding sources) of inductor should be used

Position 15 LED shows which outlet (on supported welding sources) of inductor should be used

Position 16 Display shows welding current; when LED “SETTING” is on, display shows values of wire feeder speed, pre-gas, post-gas etc.

Position 17 LED SETTING which is on only when parameters are shown: speed of wire feeder, start of wire, pre-gas and post-gas, spot time and pulse time, burning out of wire

Position 18 LED illustrating speed of shifting of welding wire

Position 19 LED illustrating spot time

Position 20 LED illustrating burnt out time

Position 21 LED illustrating post-gas time

Position 22 LED illustrating pulse time

Position 23 Button for wire lead on

# Welding torch and grounding cable connection

Disconnect the machine from the power supply before connecting the torch.

- Connect the welding torch to the EURO connector (pic. 1A/B, pos. 4) and tighten the union nut.
- Connect the grounding cable to the quick connector on the welding source.
- Connect the welding torch with water cooling to the quick couplings according to the color coding (pic. 1A/B, pos. 5).
- If you are not using a water-cooled torch you must use a water-cooling jumper on the "WS" machines.
- The welding torch and the grounding cable should be as short as possible, close to each other and located at or near floor level.

### Welding part

The part to be welded must always be connected to earth in order to reduce electromagnetic emission. Much attention must be afforded so that the earth connection of the part to be welded does not increase the risk of accident to the user or the risk of damage to other electric equipment.

# Connection of the welding wire and adjustment of gas flow

Before connecting the welding wire, it is necessary to check the wire feed rolls if they correspond to the profile of roll groove. When using the steel welding wire, it is necessary to use the roll with V-shaped roll groove.

### Changing of wire feed roll

Rolls are two-grooved. These grooves are designed for two different diameter of the wire (e.g. 0.8 and 1.0 mm).

- lift the holding-down mechanism
- screw out the locking plastic screw and take out the roll
- if there is a suitable groove on the roll, turn the roll and put it back on the shaft and secure it with a plastic locking screw

### Connection of welding wire

- take off the side cover of wire container
- put on the wire spool onto the holder into the container
- cut off the end of the wire fastened to the edge of the roller and lead it into the loading bowden (pic. 2 A/B, pos. 10), then through the roll of feed into the loading tube (pic. 2 A/B, pos. 11) 10 cm at least, check if the wire leads through the right feed groove
- tilt the holding-down roll down and return the holding-down mechanism into the vertical level
- adjust the nut pressure of thrust to secure the wire feed without problems and deformation by too much thrust
- adjust the welding wire coil brake so that the coil turns freely when the feed mechanism is switched off. Too tightened brake greatly straps the feed mechanism and wire may slip in the pulleys and misfeed. The brake adjusting screw is located under the plastic screw of the bobbin holder (pic. 4).
- dismount the gas tip of welding torch
- unscrew the flow drawing tip
- connect the socket plug into the network
- turn on the main switch into pos. 1
- press the wire feed button on the control panel
- after the run of wire from the torch, screw the flow drawing tie and gas tube
- before welding use anti-spatter spray in the space of gas tube and flow drawing tie; in that way you prevent adherence of metal spatter and prolong the life of gas tube

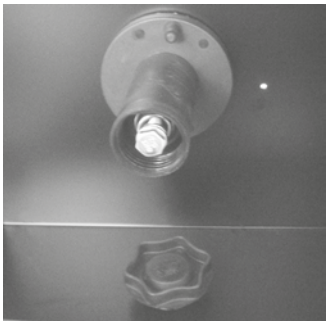

Picture 4

**WARNING!** During wire threading don't aim the torch against eyes!

### Changes when using aluminium wire

For welding with aluminium wire it is necessary to use a special roll with „U" profile. In order to avoid problems with „ruffle" of wire, it is necessary to use wire in diameter min. 1.0 mm from alloys AlMg3 or AlMg5. Wires from alloys A199.5 or AlSi5 are too soft and can easily cause problems with feed. For welding of aluminium it is necessary to equip the torch with teflone bovden and special flow drawing tie. As shielding atmosphere it is necessary to use pure Argon.

### Adjustment of gas flow

Electric arc and welding pool must be perfectly protected by gas. Too little amount of gas cannot create necessary shielding atmosphere and on the contrary, too big amount of gas entrains air into electric arc, which makes the weld imperfectly protected.

Proceed as follows:

- fix the gas tube of the gas valve on the back side of welding source
- if you use gas $CO_2$, it is suitable to plug in gas heating (during the flow less than 6 litres/min the heating is not necessary)
- plug in the cable of heating into the socket on the welding source and into the connector at cylinder pressure regulator, polarity is not important
- press GAS TEST button - on the control panel. Turn adjustment screw on the bottom side of pressure valve until flow indicator shows required flow, then release the button
- if the machine was not used for a longer time, or after entire change of welding torch, it is recommended to blow ways by fresh gas before you start welding

# Adjustment of welding parameters

Adjusted parameters depend on used protective gas, wire diameter, applied wire type, size and position of a weld etc.

Reference setting of wire speed and switch positions can be found in pages 20 - 27.

### Machines STANDARD

Adjustment of main welding parameters of welding voltage and speed of wire shift is carried out with a potentiometer of wire speed (pic. 1A/B, pos. 1) and a voltage switch (pic. 1A/B, pos. 2, 3). You shall always allocate speed of wire shift to adjusted voltage (on the welding source).

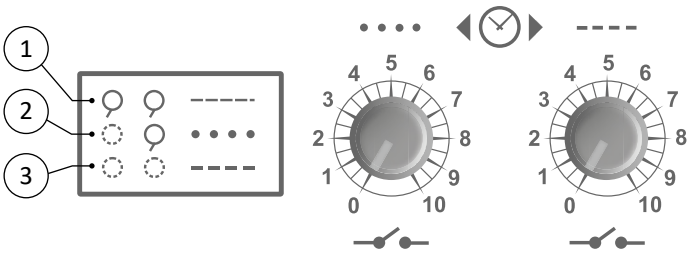


1 - Both potentiometers switched off - function switched off, normal welding
2 - Left Potentiometer Active / Right Off - Set the spot time
3 - Both potentiometers active - set the pulse time

### Machines PROCESSOR/SYNERGIC

Setting of main welding parameters - welding voltage and wire feed speed - is done by a potentiometer (pic. 3 A/B, pos. 1) and a voltage switch (on the welding source). The wire speed is always assigned to the set voltage.

### Setting speed of wire shift

Press button SET until you switch on LED marked in the picture.


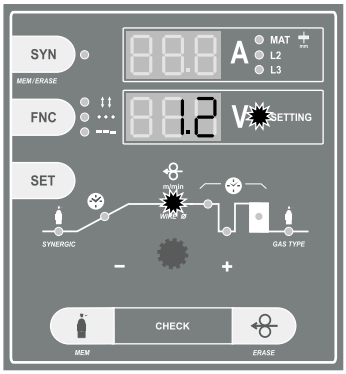


Use the potentiometer to set up required value of shift speed within range 1-20 m/min.

**NOTE 1:** Speed of wire shift can also be adjusted and changed during welding. Either a potentiometer or a remote control UP/DOWN can be used. During welding (turning the potentiometer).

**NOTE 2:** Bottom display shows speed of wire shift only if red LED SETTING and LED "m/min" are on.

### Adjustment of other welding parameters

Controlling electronics of machines PROCESSOR and SYNERGIC enables adjustment of the following welding parameters:

- Time duration of pre-gas (time of protective gas blow before the beginning of welding process).
- Time of start of wire shift speed - function SOFT START (time of start from minimum shift speed up to value of adjusted welding wire speed, only PROCESSOR).
- Approaching wire speed (only SYNERGIC).
- Speed of wire shift m/min (speed of wire shift during welding).
- Time of switching off interval of welding voltage on arc opposite wire shift: „burning out" of wire towards the torch top.
- Time of post-gas after finishing welding process.

### Setting PRE-GAS

Press button SET until you switch on LED marked in the picture.


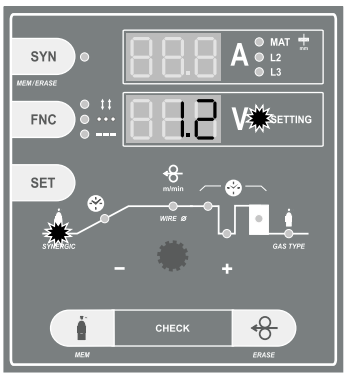


Use the potentiometer to set up required value of pre-gas time within seconds.

### Adjustment of wire burning out

Press button SET until you switch on LED marked in the picture.


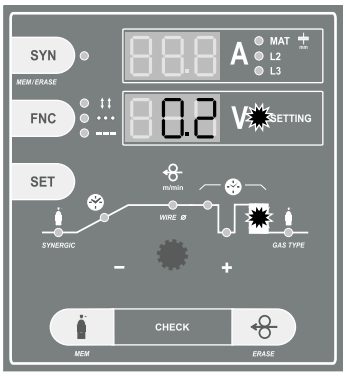


Use the potentiometer to set up required value of wire burning out within seconds.

### Setting of POST-GAS

Press button SET until you switch on LED marked in the picture.


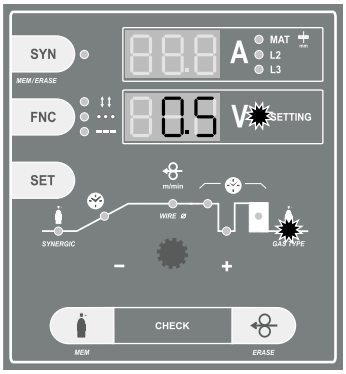


Use the potentiometer to set up required value of post-gas time 0-5 seconds.

### Adjustment of the start of wire speed - the function SOFT--START

Function SOFT-START secures an error-free start of the welding process. SOFT-START enables adjustment of the following parameters:

- the start time of welding wire speed from minimum speed up to adjusted welding speed
- approaching wire speed before welding arc ignition

Both the functions work in a different way. For a softer start approaching wire speed is recommended - the second option.

### Adjustment the start time of welding wire speed

Press button SET until you switch on LED marked in the picture.

PROCESSOR

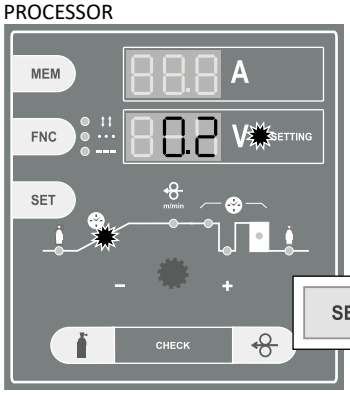


SYNERGIC

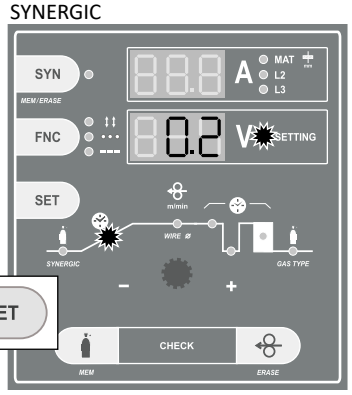





Adjust the required value of the start time of the wire speed shift with a potentiometer within the range of 0-5 seconds.

Range of value settings - **machines PROCESSOR and SYNERGIC**

| | pre-gas time | approach speed | SOFT START | wire feed speed | spot time | lag time | burn out | post-gas time |
|---|---|---|---|---|---|---|---|---|
| | (s) | (m/min) | (s) | (m/min) | (s) | (s) | (s) | (s) |
| **PROCESSOR** | 0 - 3 | - | 0.1 - 5 | 1 - 20 | 0.5 - 5 | 0.2 - 2 | 0 - 0.99 | 0.1 - 10 |
| **SYNERGIC** | 0 - 3 | 0.5 - 20 | - | 1 - 20 | 0.5 - 5 | 0.2 - 2 | 0 - 0.99 | 0.1 - 10 |

### Adjustment of the approaching wire speed shift

**ATTENTION!** Before adjusting the approaching speed of the wire, switch off the start time of the wire speed shift - set the value „0“.
Adjustment of the approaching speed - „the wire outlet“ is possible only when the function of the start time of wire speed is switched off - it means you have to set the value „0“ according to the description in the previous chapter.

Press the button SET until the LED is on, marked in the picture.


SYNERGIC

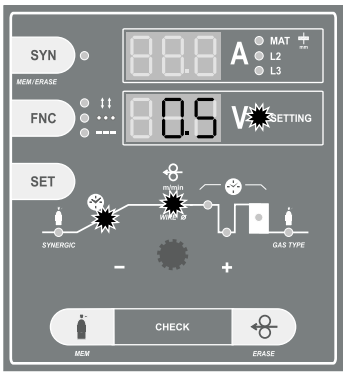


Adjust the required value of the approaching speed of the wire shift with a potentiometer within the range of 1 - 20 m/min.
**NOTE 1:** Adjusted values will be stored automatically in memory after pressing torch button for a period of about 1 sec.
**NOTE 2:** Set values can’t be changed during welding, except speed of wire shift.

### Function factory configuration

Function factory configuration is used for initial setting of all parameters for controlling electronics. After you have used this function, all values will be adjusted automatically on values pre-set by producer like with a new machines. In other words, you restart controlling electronics.

Switch the main switch off. Press and hold button SET.


Switch the main switch on. Release button SET. Display shows values of initial adjustment.

### Adjustment of welding mode

Controlling electronics of machines PROCESSOR and SYNERGIC enables welding in the following modes:

- Smooth two-stroke and four-stroke mode
- Spotting and pulse in two-stroke
- Spotting and pulse in four-stroke

### Setting two-stroke welding mode

Mode two-stroke is set up when the machine is switched off and there is no LED on such.


### Setting two-stroke SPOTTING

Press button until you switch on LED SPOTTING in the picture.


Mode two-stroke spotting is adjusted.

### Setting two-stroke PULSE

Press button until you switch on LED PULSE.


Mode two-stroke pulse is adjusted.

### Setting SPOTTING time

Press button SET until you switch on LED marked in the picture.


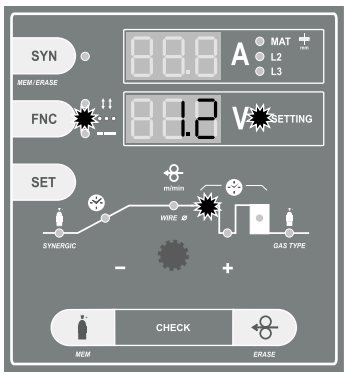


Use the potentiometer to set required value of spot time 0.5-5 seconds.

### Setting PULSE time

Press button SET until you switch on LED marked in the picture.


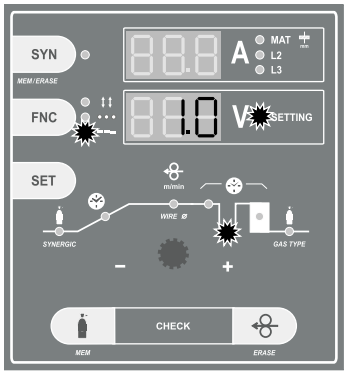


Use the potentiometer to set up required value of interval time between particular 0.2-2 seconds.

### Setting four-stroke welding mode

Press button FNC until you switch on LED.


Mode four-stroke is adjusted.

### Setting four-stroke SPOTTING

Press button FNC until you switch on two LED four-stroke and SPOTTING in the picture.


Mode four-stroke spotting is adjusted.

### Setting four-time PULSE mode

Press button FNC until you switch on two LED four-stroke and PULSE in the pic.


Mode four-stroke pulse is adjusted.

**Function MEM** (only with machines PROCESSOR)
Function enables back recall and display of last welding parameters for a period of about 7 seconds.

Press button MEM


Display will show last measured values of welding voltage and current for 7 seconds. Values can be recalled repeatedly.

**Function SYNERGIC** (only with machines SYNERGIC)
Function SYNERGIC simplifies operating and adjustment of welding parameters. Operating staff can specify type of program through a simple setting of gas type and wire diameter. To set welding parameters you can set simply and easily voltage with a switch and electronics will adjust speed of wire shift automatically.

### Switching on function SYNERGIC
Press button SYN until you switch on LED SYN and LED material thickness.


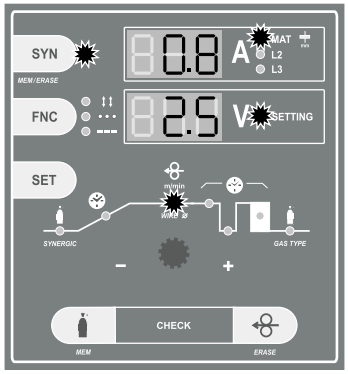


Function SYNERGIC is on.

### Program choice - adjustment of wire diameter and gas type
Press button SET until you switch on LED marked in the picture.


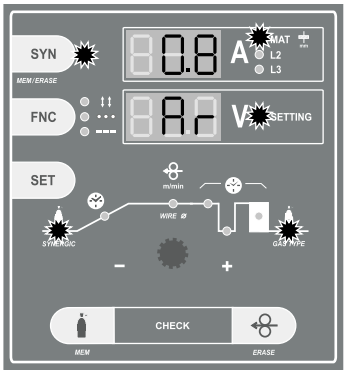


Using the potentiometer, you shall choose gas type you are going to apply - $CO_2$ or Ar (marks MIX argon and $CO_2$ gas in ratio 18 $CO_2$ and the rest Ar.

Press button SET until you switch on LED diode marked in picture.


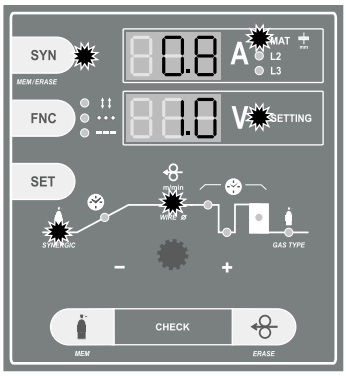


Use the potentiometer, thus you shall choose wire diameter SG2 you are going to use - 0.6 - 0.8 - 1.0 mm.

Approximate thickness of material possible to weld according to current adjustment will be shown on upper display. Currently adjusted speed of wire shift will be shown on bottom display, which is changed automatically when you change positions of voltage switch. Fall or rise in welding capacity is adjustted with a voltage switch.

### Switching function SYNERGIC off
Press button SYN. Diode SYN and material thickness will switch off.


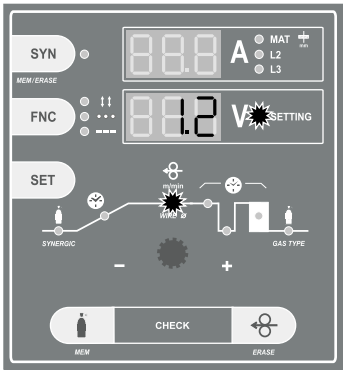


Function SYNERGIC is off.

**NOTE 1:** Shown values of material thickness are only approximate. Thickness of material can vary according to welding position etc.

**NOTE 2:** To correct parameter for wire shift, you shall use a potentiometer or buttons of remote control UP/DOWN.

**NOTE 3:** Parameters of the program synergic function are designed for copper coated wire SG2. In order to reach the correct function of the synergic programs, it is necessary to use quality wire, protective wire, gas and welding material.

**NOTE 4:** In order to reach the correct function of the synergic machine it is necessary to keep prescribed diameters of cables to wire diameters and the right die otherwise the correct function of the machine is not guaranteed. Further on, it is necessary to secure quality power supply – 400 V, max. ± 5%, connecting to ground of the welding material (use an earthing clip directly on the welding material).

### Recording own parameters of the speed of the wire shift into memory
The function of storing parameters is on only if the function synergic is on.
1. Choose the required speed of the wire shift.
2. Press and hold the button SYN and then press button GAS TEST.


Press together

3. Release both the buttons - new parameters are stored.

All the required parameters can be stored and rewritten in this way as necessary. The recorded parameter is adjusted always in the same position of the voltage switch when the parameter was stored.

### Return to the factory default settings
A return to original parameters SYNERGIC adjusted by the producer is done by the follow-up pressing and holding the button SYN and then pressing and releasing the button of wire threading. In such a way it is possible to return single parameters which have been stored. A total return of all the pre-adjusted values to the values set up by the producer can be done through the function factory configuration.


Press together

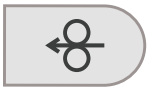

**Function LOGIC** (only with machines PROCESSOR and SYNERGIC)
Function LOGIC includes a file of simplifying and clarifying points which present adjusted and currently set values.
If two displays show a few different parameters, it is necessary to simplify presentation of parameters. Function LOGIC operates just in this way - it makes everything clear and distinct:

- Upper display switches on during welding process only when electronics makes measurements and shows welding current A (in case there is no mode SYNERGIC on. In case there is mode SYNERGIC on display is lit up constantly and only shown values change). After approx. 7 sec. display switches off automatically again. Thus electronics increases orientation while reading parameters during adjustment.
- Upper display shows only welding current. When function SYNERGIC is on (only with machines Synergic), upper display shows thickness of material.
- Bottom display shows welding voltage while welding and other values - time, speed etc. during adjustment.
- LED SETTING will switch off during welding process only when a digital voltampermeter is used.
- LED SETTING is on during welding only when operating staff is adjusting and changing speed of wire shift with a potentiometer or a remote control UP/DOWN. As soon as operating staff stops adjustment of a parameter, LED SETTING will be switched off automatically within 3 sec. and display shows value of welding voltage.

Recommended adjustment of welding parameters see charts on pg. 20 - 27.

### Principle of MIG/MAG welding

Welding wire is lead from the roller into the flow drawing tie with the use of the feed. Arc joins thawing wire electrode with welding material. Welding wire functions as a carrier of the arc and as the source of additional material at the same time. Protective gas flows from the spacer which protects arc and the whole weld against the effects of surrounding atmosphere (pic. 5).

**Picture 5**

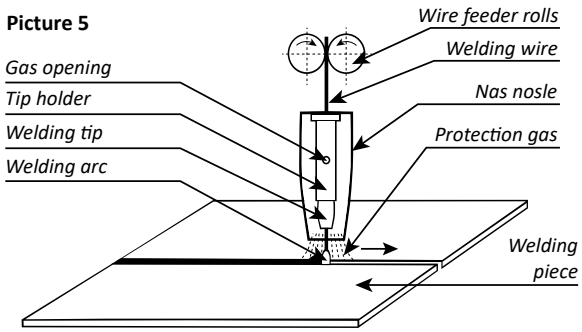


### Protection gases

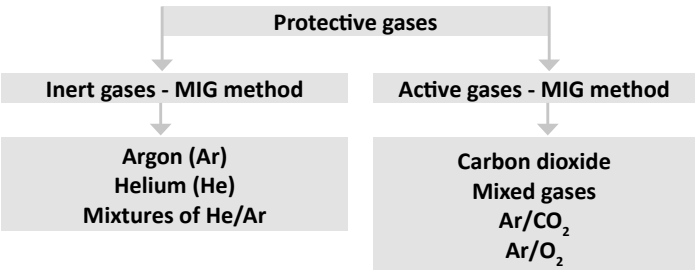


### Principle of setting welding parameters

Guidance for setting welding current and voltage MIG / MAG corresponds to the empirical relationship $U_2 = 14 + 0.05 \times I2$. According to this relationship, we can determine the necessary tension. When setting the voltage, it must be taken into account when it falls under the welding load. The voltage drop is about 4.8 V per 100 A.
The welding current is adjusted by adjusting the required welding current for the selected welding voltage by increasing or decreasing the wire feeding speed, or by fine-tuning the voltage until the welding arc is stable. To achieve a good weld quality and optimum welding current setting, the distance between the feed die and the material must be approximately 10 x Ø of the welding wire (pic. 6). Drowning the die in the gas nozzle should not exceed 2 - 3 mm.

## Welding work cycles

Welding machines work in four working cycles:

- continuous two-stroke time
- continuous four-stroke time
- spot welding two-stroke time
- pulse welding two/four -stroke time

### Two-stroke cycle

Welding process is started by only the pressing the switch of the torch. The switch must always be held during the welding process and it can be interrupted releasing the switch of the torch.

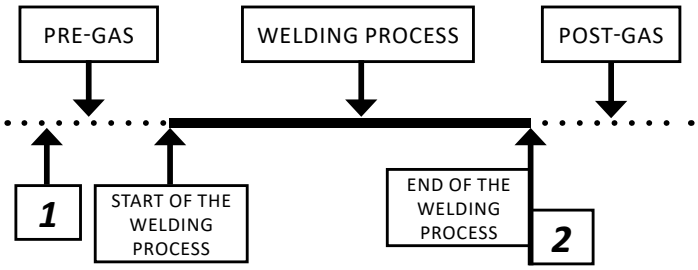


1 - Push and hold the switch of torch
2 - Release the switch of torch

### Four-stroke cycle

It is used to weld long, when the welder does not have to hold the switch of the torch all the time. You will start the welding process in such a way. After releasing of the switch, the welding process still goes on. Only after a further pressing and releasing of the switch of the torch, the welding process is interrupted.

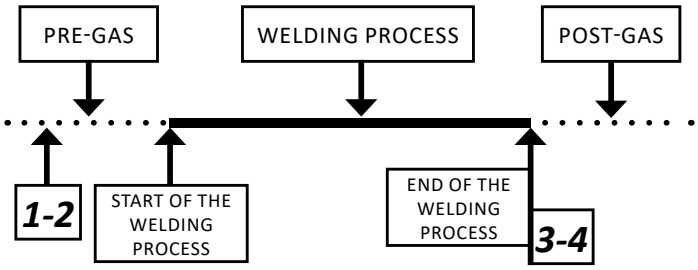


1-2 Push and hold the switch of torch
3-4 Release the switch of torch

### Spot welding

It is used for welding by individual short spots, whose length can be continuously adjusted for required value. By pressing the switch on the torch, the time circuit is started, which starts the welding process and after the set time it turns off. After further pressing the button, the whole process is repeated.

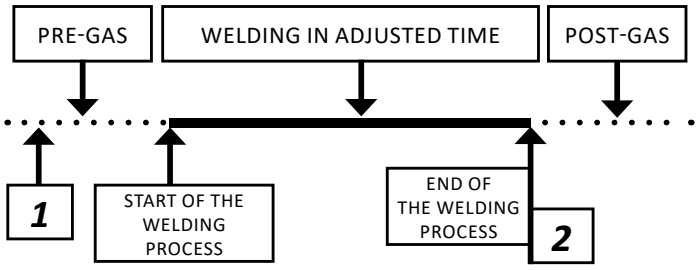


1 - Push and hold the switch of torch
2 - Release the switch of torch

### Pulse welding

It is used for welding by short spots. Length of these spots and pauses can be continuously adjusted. By pressing the switch of the torch, time circuit is started, which starts the welding process and after certain time turns it off. After set pause, the whole activity is repeated. To interrupt the function, it is necessary to release the switch on the welding torch.

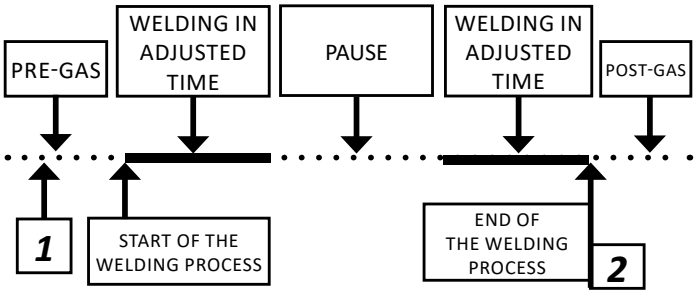


1 - Push and hold the switch of torch
2 - Release the switch of torch

### Regular maintenance and inspections

Conduct the inspections according to the relevant Standard EN 60974-4. Before any use of the apparatus, check the conditions of the welding and power supply cables. Do not use damaged cables!
Visual inspections include:
1. Torch, welding current return clamp
2. Power supply network
3. Welding circuit
4. Covers
5. Controlling and indicating elements
6. Apparatus condition in general

### The pointing out of any difficulties and their elimination

The supply line is attributed with the cause of the most common difficulties. In the case of breakdown, proceed as follows:
1. Check the value of the supply voltage
2. Check that the power cable is perfectly connected to the plug and the supply switch
3. Check that the power fuses are not burned out or loose
4. Check whether the following are defective:
- The switch that supplies the machine
- The plug socket in the wall
- The generator switch

**NOTE:** Given the required technical skills necessary for the repair of the generator, in case of breakdown we advise you to contact skilled personnel or our technical service department.

### Ordering spare parts

For easy ordering of spare parts mention:
1. The order number and name of the part
2. The type of the machine or welding torch
3. Supply voltage and frequency from rating plate
4. Serial number of the machine

**Grafické symboly na výrobním štítku / Graphic symbols on the production plate**

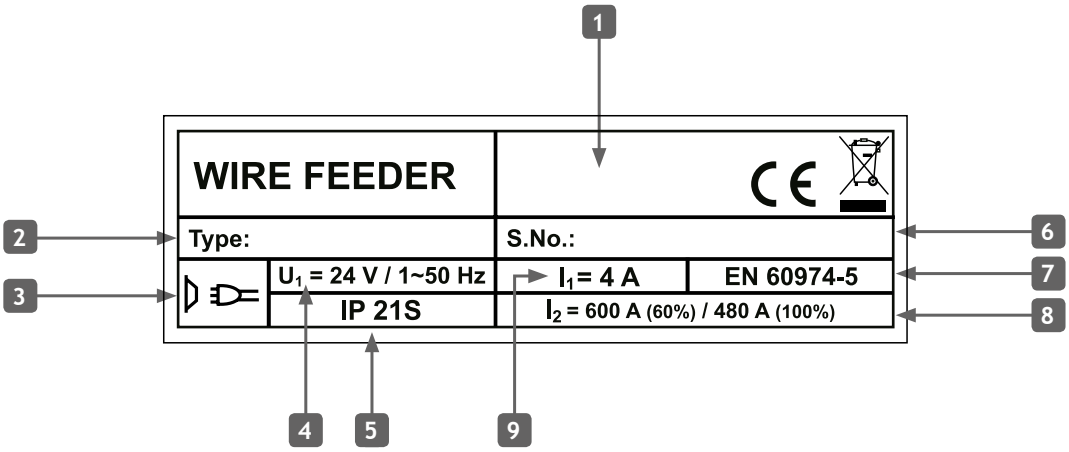


| | Popis / CZ | Description / ENG |
|---|---|---|
| 1 | Jméno a adresa výrobce | Name and address |
| 2 | Typ stroje | Type of machine |
| 3 | Počet fází | Number of phase |
| 4 | Jmenovité napájecí napětí a frekvence | Input voltage and frequency |
| 5 | Krytí | Protection degree |
| 6 | Výrobní číslo | Serial number |
| 7 | Normy | Standards |
| 8 | Jmenovitý výstupní proud | Output current |
| 9 | Vstupní proud | Main current |

**Porovnávací tabulka stupnice rychlosti posuvu drátů strojů Standard (m/min.)**
**Comparing chart with scales of wire shift speed of machines Standard (m/min.)**

| Stupnice potenciometru<br>Scale of potentiometer | 1 | 2 | 3 | 4 | 5 | 6 | 7 | 8 | 9 | 10 | 11 |
|---|---|---|---|---|---|---|---|---|---|---|---|
| Orientační hodnoty v m/min<br>Reference values in m/min | 4 | 5.8 | 11.5 | 15 | 18 | 20.5 | 23 | 23.5 | 24 | 24.5 | 25 |

**Doporučené nastavení svařovacích parametrů / Recommended adjustment of welding parameters**
**PROCESSOR – 400 WS**

| PROGRAM NO.1 400-0.6-$CO_2$ | | | | | | | | | | | | | | | | | | | | |
|---|---|---|---|---|---|---|---|---|---|---|---|---|---|---|---|---|---|---|---|---|
| | A | A | A | A | A | A | A | A | A | A | B | B | B | B | B | B | B | B | B | B |
| | 1 | 2 | 3 | 4 | 5 | 6 | 7 | 8 | 9 | 10 | 1 | 2 | 3 | 4 | 5 | 6 | 7 | 8 | 9 | 10 |
| m/min | - | - | - | - | - | - | - | - | - | - | - | - | - | - | - | - | - | - | - | - |
| | - | - | - | - | - | - | - | - | - | - | - | - | - | - | - | - | - | - | - | - |
| Orientační doporučené hodnoty ostatních parametrů / Orientačné odporúčané hodnoty ostatných parametrov / Reference advisory values of other parameters / Empfohlene Richtwerte der anderen Parameter / Orientacyjne zalecane wartości pozostałych parametrów | | | | | | | | | | | | | | | | | | | | |
| Tlumivka<br>Choke | - | - | - | - | - | - | - | - | - | - | - | - | - | - | - | - | - | - | - | - |
| SOFT START | - | - | - | - | - | - | - | - | - | - | - | - | - | - | - | - | - | - | - | - |
| | - | - | - | - | - | - | - | - | - | - | - | - | - | - | - | - | - | - | - | - |
| | C | C | C | C | A | C | C | C | C | C | D | D | D | D | D | D | D | D | D | D |
| | 1 | 2 | 3 | 4 | 5 | 6 | 7 | 8 | 9 | 10 | 1 | 2 | 3 | 4 | 5 | 6 | 7 | 8 | 9 | 10 |
| m/min | - | - | - | - | - | - | - | - | - | - | - | - | - | - | - | - | - | - | - | - |
| | - | - | - | - | - | - | - | - | - | - | - | - | - | - | - | - | - | - | - | - |
| Orientační doporučené hodnoty ostatních parametrů / Orientačné odporúčané hodnoty ostatných parametrov / Reference advisory values of other parameters / Empfohlene Richtwerte der anderen Parameter / Orientacyjne zalecane wartości pozostałych parametrów | | | | | | | | | | | | | | | | | | | | |
| Tlumivka | - | - | - | - | - | - | - | - | - | - | - | - | - | - | - | - | - | - | - | - |
| SOFT START | - | - | - | - | - | - | - | - | - | - | - | - | - | - | - | - | - | - | - | - |
| | - | - | - | - | - | - | - | - | - | - | - | - | - | - | - | - | - | - | - | - |

| PROGRAM NO.3 400-0.8-$CO_2$ | | | | | | | | | | | | | | | | | | | | |
|---|---|---|---|---|---|---|---|---|---|---|---|---|---|---|---|---|---|---|---|---|
| | A | A | A | A | A | A | A | A | A | A | B | B | B | B | B | B | B | B | B | B |
| | 1 | 2 | 3 | 4 | 5 | 6 | 7 | 8 | 9 | 10 | 1 | 2 | 3 | 4 | 5 | 6 | 7 | 8 | 9 | 10 |
| m/min | - | - | - | - | - | 3,8 | 4 | 4,1 | 4,2 | 4,3 | 4,3 | 4,4 | 4,6 | 4,8 | 5 | 5,3 | 5,8 | 6,6 | 7,4 | 8 |
| | - | - | - | - | - | 0,8 | 0,8 | 1 | 1,5 | 1,5 | 2 | 2,5 | 2,5 | 3 | 4 | 4 | 5 | 5 | 6 | 6 |
| Orientační doporučené hodnoty ostatních parametrů / Orientačné odporúčané hodnoty ostatných parametrov / Reference advisory values of other parameters / Empfohlene Richtwerte der anderen Parameter / Orientacyjne zalecane wartości pozostałych parametrów | | | | | | | | | | | | | | | | | | | | |
| Tlumivka Choke | - | - | - | - | - | 1 | 1 | 1 | 1 | 1 | 1 | 1 | 1 | 1 | 1 | 1 | 1 | 1 | 1 | 1 |
| Výlet SOFT START | - | - | - | - | - | 0,1 | 0,1 | 0,1 | 0,1 | 0,1 | 0,2 | 0,3 | 0,3 | 0,3 | 0,3 | 0,3 | 0,3 | 0,3 | 0,3 | 0,3 |
| | - | - | - | - | - | 0,35 | 0,35 | 0,35 | 0,35 | 0,35 | 0,35 | 0,35 | 0,35 | 0,35 | 0,35 | 0,35 | 0,35 | 0,35 | 0,35 | 0,35 |
| | C | C | C | C | A | C | C | C | C | C | D | D | D | D | D | D | D | D | D | D |
| | 1 | 2 | 3 | 4 | 5 | 6 | 7 | 8 | 9 | 10 | 1 | 2 | 3 | 4 | 5 | 6 | 7 | 8 | 9 | 10 |
| m/min | 8,6 | 9 | 9,6 | 10 | 10,5 | 11,1 | 11,7 | 12,5 | 13,6 | 14,6 | 15,9 | 17 | 18,6 | 20 | - | - | - | - | - | - |
| | 7 | 8 | 8 | 9 | 10 | 10 | 12 | 14 | 14 | 16 | 18 | 18 | 20 | 20 | - | - | - | - | - | - |
| Orientační doporučené hodnoty ostatních parametrů / Orientačné odporúčané hodnoty ostatných parametrov / Reference advisory values of other parameters / Empfohlene Richtwerte der anderen Parameter / Orientacyjne zalecane wartości pozostałych parametrów | | | | | | | | | | | | | | | | | | | | |
| Tlumivka Choke | 1 | 1 | 1 | 1 | 1 | 1 | 1 | 1 | 1 | 1 | 1 | 1 | 1 | 1 | - | - | - | - | - | - |
| Výlet SOFT START | 0,3 | 0,3 | 0,3 | 0,3 | 0,3 | 0,3 | 0,3 | 0,3 | 0,3 | 0,3 | 0,3 | 0,3 | 0,3 | 0,3 | - | - | - | - | - | - |
| | 0,35 | 0,35 | 0,35 | 0,35 | 0,35 | 0,35 | 0,35 | 0,35 | 0,35 | 0,2 | 0,2 | 0,2 | 0,2 | 0,2 | - | - | - | - | - | - |

| PROGRAM NO.4 400-0.8-MIX | | | | | | | | | | | | | | | | | | | | |
|---|---|---|---|---|---|---|---|---|---|---|---|---|---|---|---|---|---|---|---|---|
| | A | A | A | A | A | A | A | A | A | A | B | B | B | B | B | B | B | B | B | B |
| | 1 | 2 | 3 | 4 | 5 | 6 | 7 | 8 | 9 | 10 | 1 | 2 | 3 | 4 | 5 | 6 | 7 | 8 | 9 | 10 |
| m/min | 3 | 3,3 | 3,6 | 3,8 | 4 | 4,2 | 4,6 | 5 | 5,4 | 5,6 | 6 | 6,3 | 6,7 | 7,2 | 7,6 | 8,1 | 8,6 | 9,4 | 9,9 | 10,6 |
| | 0,8 | 0,8 | 0,8 | 0,8 | 1 | 1,2 | 1,5 | 1,5 | 2 | 2 | 2 | 2,5 | 2,5 | 3 | 3 | 3 | 3,5 | 3,5 | 4 | 4 |
| Orientační doporučené hodnoty ostatních parametrů / Orientačné odporúčané hodnoty ostatných parametrov / Reference advisory values of other parameters / Empfohlene Richtwerte der anderen Parameter / Orientacyjne zalecane wartości pozostałych parametrów | | | | | | | | | | | | | | | | | | | | |
| Tlumivka Choke | 1 | 1 | 1 | 1 | 1 | 1 | 1 | 1 | 1 | 1 | 1 | 1 | 1 | 1 | 1 | 1 | 1 | 1 | 1 | 1 |
| Výlet SOFT START | 0 | 0 | 0 | 0,1 | 0,1 | 0,2 | 0,2 | 0,2 | 0,2 | 0,2 | 0,2 | 0,2 | 0,2 | 0,2 | 0,2 | 0,2 | 0,2 | 0,2 | 0,2 | 0,4 |
| | 0,15 | 0,15 | 0,15 | 0,15 | 0,15 | 0,15 | 0,15 | 0,15 | 0,15 | 0,15 | 0,15 | 0,15 | 0,15 | 0,15 | 0,15 | 0,15 | 0,15 | 0,15 | 0,15 | 0,15 |
| | C | C | C | C | A | C | C | C | C | C | D | D | D | D | D | D | D | D | D | D |
| | 1 | 2 | 3 | 4 | 5 | 6 | 7 | 8 | 9 | 10 | 1 | 2 | 3 | 4 | 5 | 6 | 7 | 8 | 9 | 10 |
| m/min | 11,1 | 12 | 12,7 | 13,4 | 14,3 | 15,2 | 16,1 | 17 | 18,2 | 19 | 19,5 | 20 | - | - | - | - | - | - | - | - |
| | 4,5 | 5 | 6 | 7 | 8 | 9 | 10 | 12 | 14 | 16 | 18 | 18 | - | - | - | - | - | - | - | - |
| Orientační doporučené hodnoty ostatních parametrů / Orientačné odporúčané hodnoty ostatných parametrov / Reference advisory values of other parameters / Empfohlene Richtwerte der anderen Parameter / Orientacyjne zalecane wartości pozostałych parametrów | | | | | | | | | | | | | | | | | | | | |
| Tlumivka Choke | 1 | 1 | 1 | 1 | 1 | 1 | 1 | 1 | 1 | 1 | 1 | 1 | - | - | - | - | - | - | - | - |
| Výlet SOFT START | 0,4 | 0,4 | 0,4 | 0,4 | 0,4 | 0,4 | 0,4 | 0,4 | 0,4 | 0,4 | 0,4 | 0,4 | - | - | - | - | - | - | - | - |
| | 0,15 | 0,15 | 0,15 | 0,15 | 0,15 | 0,15 | 0,15 | 0,15 | 0,15 | 0,15 | 0,15 | 0,15 | - | - | - | - | - | - | - | - |

| PROGRAM NO.5 400-1,0-$CO_2$ | | | | | | | | | | | | | | | | | | | | |
|---|---|---|---|---|---|---|---|---|---|---|---|---|---|---|---|---|---|---|---|---|
| | A | A | A | A | A | A | A | A | A | A | B | B | B | B | B | B | B | B | B | B |
| | 1 | 2 | 3 | 4 | 5 | 6 | 7 | 8 | 9 | 10 | 1 | 2 | 3 | 4 | 5 | 6 | 7 | 8 | 9 | 10 |
| m/min | - | - | 2,6 | 2,9 | 3,2 | 3,5 | 3,7 | 3,9 | 4,1 | 4,4 | 4,5 | 4,6 | 4,7 | 4,8 | 4,8 | 4,9 | 5 | 5,2 | 5,4 | 5,6 |
| | - | - | 1 | 1 | 1,5 | 2 | 2 | 2,5 | 3 | 3 | 3 | 4 | 4 | 4 | 5 | 5 | 5 | 5 | 6 | 6 |
| Orientační doporučené hodnoty ostatních parametrů / Orientačné odporúčané hodnoty ostatných parametrov / Reference advisory values of other parameters / Empfohlene Richtwerte der anderen Parameter / Orientacyjne zalecane wartości pozostałych parametrów | | | | | | | | | | | | | | | | | | | | |
| Tlumivka Choke | - | - | 1 | 1 | 1 | 1 | 1 | 1 | 1 | 1 | 1 | 1 | 1 | 1 | 1 | 1 | 1 | 1 | 1 | 1 |
| SOFT START | - | - | 0,1 | 0,1 | 0,1 | 0,1 | 0,1 | 0,1 | 0,1 | 0,2 | 0,2 | 0,2 | 0,2 | 0,2 | 0,2 | 0,2 | 0,2 | 0,2 | 0,2 | 0,2 |
| | - | - | 0,25 | 0,25 | 0,25 | 0,25 | 0,25 | 0,25 | 0,25 | 0,25 | 0,25 | 0,25 | 0,25 | 0,25 | 0,25 | 0,25 | 0,25 | 0,25 | 0,25 | 0,25 |
| | C | C | C | C | A | C | C | C | C | C | D | D | D | D | D | D | D | D | D | D |
| | 1 | 2 | 3 | 4 | 5 | 6 | 7 | 8 | 9 | 10 | 1 | 2 | 3 | 4 | 5 | 6 | 7 | 8 | 9 | 10 |
| m/min | 5,9 | 6,2 | 6,6 | 7 | 7,8 | 8,6 | 9,5 | 10,9 | 12,2 | 13,5 | 14,4 | 15,1 | 16,2 | 17 | 18,2 | 19,3 | - | - | - | - |
| | 7 | 7 | 8 | 8 | 8 | 10 | 10 | 12 | 12 | 14 | 16 | 18 | 18 | 20 | 20 | 20 | - | - | - | - |
| Orientační doporučené hodnoty ostatních parametrů / Orientačné odporúčané hodnoty ostatných parametrov / Reference advisory values of other parameters / Empfohlene Richtwerte der anderen Parameter / Orientacyjne zalecane wartości pozostałych parametrów | | | | | | | | | | | | | | | | | | | | |
| Tlumivka Choke | 1 | 1 | 1 | 1 | 1 | 1 | 1 | 1 | 1 | 1 | 1 | 2 | 2 | 2 | 2 | 2 | - | - | - | - |
| SOFT START | 0,2 | 0,2 | 0,2 | 0,2 | 0,3 | 0,3 | 0,3 | 0,3 | 0,3 | 0,3 | 0,3 | 0,3 | 0,3 | 0,3 | 0,3 | 0,3 | - | - | - | - |
| | 0,25 | 0,25 | 0,25 | 0,25 | 0,25 | 0,25 | 0,25 | 0,25 | 0,25 | 0,25 | 0,25 | 0,15 | 0,15 | 0,15 | 0,15 | 0,15 | - | - | - | - |

| PROGRAM NO.6 400-1,0-MIX | | | | | | | | | | | | | | | | | | | | |
|---|---|---|---|---|---|---|---|---|---|---|---|---|---|---|---|---|---|---|---|---|
| | A | A | A | A | A | A | A | A | A | A | B | B | B | B | B | B | B | B | B | B |
| | 1 | 2 | 3 | 4 | 5 | 6 | 7 | 8 | 9 | 10 | 1 | 2 | 3 | 4 | 5 | 6 | 7 | 8 | 9 | 10 |
| m/min | - | - | - | - | 4,2 | 4,3 | 4,5 | 4,8 | 5,2 | 5,5 | 5,8 | 6,2 | 6,6 | 6,9 | 7,2 | 7,6 | 8,1 | 8,4 | 8,8 | 9,3 |
| | - | - | - | - | 1 | 1 | 1,5 | 2 | 2 | 2,5 | 3 | 3 | 4 | 4 | 4 | 5 | 5 | 5 | 6 | 6 |
| Orientační doporučené hodnoty ostatních parametrů / Orientačné odporúčané hodnoty ostatných parametrov / Reference advisory values of other parameters / Empfohlene Richtwerte der anderen Parameter / Orientacyjne zalecane wartości pozostałych parametrów | | | | | | | | | | | | | | | | | | | | |
| Tlumivka Choke | - | - | - | - | 1 | 1 | 1 | 1 | 1 | 1 | 1 | 1 | 1 | 1 | 1 | 1 | 1 | 1 | 1 | 1 |
| SOFT START | - | - | - | - | 0,1 | 0,1 | 0,1 | 0,1 | 0,1 | 0,1 | 0,2 | 0,2 | 0,2 | 0,2 | 0,2 | 0,2 | 0,2 | 0,2 | 0,2 | 0,2 |
| | - | - | - | - | 0,25 5 | 0,25 5 | 0,25 5 | 0,25 5 | 0,25 5 | 0,25 5 | 0,25 5 | 0,25 5 | 0,25 5 | 0,25 5 | 0,25 5 | 0,25 5 | 0,25 5 | 0,25 5 | 0,25 5 | 0,25 5 |
| | C | C | C | C | A | C | C | C | C | C | D | D | D | D | D | D | D | D | D | D |
| | 1 | 2 | 3 | 4 | 5 | 6 | 7 | 8 | 9 | 10 | 1 | 2 | 3 | 4 | 5 | 6 | 7 | 8 | 9 | 10 |
| m/min | 9,7 | 10,2 | 10,7 | 11,3 | 12 | 12,6 | 13,4 | 14,2 | 15 | 15,9 | 17 | 18 | 19 | 20 | - | - | - | - | - | - |
| | 6 | 6 | 8 | 8 | 8 | 10 | 12 | 14 | 16 | 18 | 18 | 20 | 20 | 20 | - | - | - | - | - | - |
| Orientační doporučené hodnoty ostatních parametrů / Orientačné odporúčané hodnoty ostatných parametrov / Reference advisory values of other parameters / Empfohlene Richtwerte der anderen Parameter / Orientacyjne zalecane wartości pozostałych parametrów | | | | | | | | | | | | | | | | | | | | |
| Tlumivka Choke | 1 | 1 | 1 | 1 | 1 | 1 | 1 | 1 | 1 | 1 | 1 | 1 | 1 | 1 | - | - | - | - | - | - |
| SOFT START | 0,2 | 0,2 | 0,2 | 0,2 | 0,2 | 0,3 | 0,3 | 0,3 | 0,3 | 0,3 | 0,3 | 0,3 | 0,3 | 0,3 | - | - | - | - | - | - |
| | 0,25 | 0,25 | 0,25 | 0,25 | 0,25 | 0,25 | 0,25 | 0,25 | 0,25 | 0,15 | 0,15 | 0,15 | 0,15 | 0,15 | - | - | - | - | - | - |

| PROGRAM NO.7 400-1,2-$CO_2$ | | | | | | | | | | | | | | | | | | | | |
|---|---|---|---|---|---|---|---|---|---|---|---|---|---|---|---|---|---|---|---|---|
| | A | A | A | A | A | A | A | A | A | A | B | B | B | B | B | B | B | B | B | B |
| | 1 | 2 | 3 | 4 | 5 | 6 | 7 | 8 | 9 | 10 | 1 | 2 | 3 | 4 | 5 | 6 | 7 | 8 | 9 | 10 |
| m/min | - | - | - | - | - | - | - | - | - | - | 2,9 | 3 | 3,1 | 3,2 | 3,3 | 3,5 | 3,7 | 3,9 | 4,2 | 4,4 |
| | - | - | - | - | - | - | - | - | - | - | 1,5 | 1,5 | 2 | 2 | 2 | 3 | 3,5 | 4 | 4 | 4 |
| Orientační doporučené hodnoty ostatních parametrů / Orientačné odporúčané hodnoty ostatných parametrov / Reference advisory values of other parameters / Empfohlene Richtwerte der anderen Parameter / Orientacyjne zalecane wartości pozostałych parametrów | | | | | | | | | | | | | | | | | | | | |
| Tlumivka Choke | - | - | - | - | - | - | - | - | - | - | 1 | 1 | 1 | 1 | 1 | 1 | 1 | 1 | 1 | 1 |
| Výlet SOFT START | - | - | - | - | - | - | - | - | - | - | 0,2 | 0,2 | 0,2 | 0,2 | 0,2 | 0,2 | 0,2 | 0,2 | 0,2 | 0,2 |
| | - | - | - | - | - | - | - | - | - | - | 0,2 | 0,2 | 0,2 | 0,2 | 0,2 | 0,2 | 0,2 | 0,2 | 0,2 | 0,2 |
| | C | C | C | C | A | C | C | C | C | C | D | D | D | D | D | D | D | D | D | D |
| | 1 | 2 | 3 | 4 | 5 | 6 | 7 | 8 | 9 | 10 | 1 | 2 | 3 | 4 | 5 | 6 | 7 | 8 | 9 | 10 |
| m/min | 4,6 | 4,9 | 5,4 | 5,9 | 6,4 | 6,7 | 7 | 7,4 | 8,1 | 8,7 | 9,5 | 10,2 | 11 | 11,4 | 12,2 | 12,9 | 13,6 | 14,3 | 15 | 15,6 |
| | 5 | 5 | 5 | 6 | 6 | 8 | 8 | 8 | 10 | 10 | 12 | 12 | 14 | 14 | 16 | 16 | 18 | 18 | 20 | 20 |
| Orientační doporučené hodnoty ostatních parametrů / Orientačné odporúčané hodnoty ostatných parametrov / Reference advisory values of other parameters / Empfohlene Richtwerte der anderen Parameter / Orientacyjne zalecane wartości pozostałych parametrów | | | | | | | | | | | | | | | | | | | | |
| Tlumivka Choke | 1 | 1 | 1 | 1 | 1 | 1 | 1 | 1 | 1 | 1 | 1 | 1 | 1 | 2 | 2 | 2 | 2 | 2 | 2 | 2 |
| Výlet SOFT START | 0,2 | 0,2 | 0,2 | 0,2 | 0,2 | 0,2 | 0,2 | 0,2 | 0,2 | 0,2 | 0,2 | 0,2 | 0,2 | 0,2 | 0,2 | 0,2 | 0,2 | 0,2 | 0,2 | 0,2 |
| | 0,2 | 0,2 | 0,2 | 0,2 | 0,2 | 0,2 | 0,2 | 0,2 | 0,2 | 0,2 | 0,2 | 0,2 | 0,2 | 0,2 | 0,2 | 0,2 | 0,2 | 0,2 | 0,2 | 0,2 |

| PROGRAM NO.8 400-1,2-MIX | | | | | | | | | | | | | | | | | | | | |
|---|---|---|---|---|---|---|---|---|---|---|---|---|---|---|---|---|---|---|---|---|
| | A | A | A | A | A | A | A | A | A | A | B | B | B | B | B | B | B | B | B | B |
| | 1 | 2 | 3 | 4 | 5 | 6 | 7 | 8 | 9 | 10 | 1 | 2 | 3 | 4 | 5 | 6 | 7 | 8 | 9 | 10 |
| m/min | - | - | - | - | - | 2,1 | 2,5 | 2,7 | 2,8 | 3 | 3,3 | 3,8 | 4,5 | 5 | 5,4 | 5,8 | 6,6 | 6,9 | 7,3 | 7,5 |
| | - | - | - | - | - | 1 | 1,5 | 1,5 | 1,5 | 2 | 2 | 2,5 | 2,5 | 3 | 3 | 4 | 5 | 5 | 6 | 6 |
| Orientační doporučené hodnoty ostatních parametrů / Orientačné odporúčané hodnoty ostatných parametrov / Reference advisory values of other parameters / Empfohlene Richtwerte der anderen Parameter / Orientacyjne zalecane wartości pozostałych parametrów | | | | | | | | | | | | | | | | | | | | |
| Tlumivka Choke | - | - | - | - | - | 1 | 1 | 1 | 1 | 1 | 1 | 1 | 1 | 1 | 1 | 1 | 1 | 1 | 1 | 1 |
| Výlet SOFT START | - | - | - | - | - | 0,2 | 0,3 | 0,3 | 0,3 | 0,3 | 0,3 | 0,3 | 0,3 | 0,3 | 0,3 | 0,3 | 0,3 | 0,3 | 0,3 | 0,3 |
| | - | - | - | - | - | 0,1 | 0,1 | 0,1 | 0,1 | 0,1 | 0,2 | 0,2 | 0,2 | 0,2 | 0,2 | 0,2 | 0,3 | 0,3 | 0,3 | 0,3 |
| | C | C | C | C | A | C | C | C | C | C | D | D | D | D | D | D | D | D | D | D |
| | 1 | 2 | 3 | 4 | 5 | 6 | 7 | 8 | 9 | 10 | 1 | 2 | 3 | 4 | 5 | 6 | 7 | 8 | 9 | 10 |
| m/min | 7,8 | 8,1 | 8,4 | 8,8 | 9,3 | 9,7 | 10,3 | 10,8 | 11,3 | 11,8 | 12,2 | 12,7 | 12,8 | 13,2 | 13,9 | 14,4 | 15,2 | 15,9 | 17 | 18 |
| | 6 | 8 | 8 | 8 | 10 | 10 | 10 | 12 | 12 | 12 | 14 | 14 | 16 | 16 | 16 | 18 | 18 | 20 | 20 | 20 |
| Orientační doporučené hodnoty ostatních parametrů / Orientačné odporúčané hodnoty ostatných parametrov / Reference advisory values of other parameters / Empfohlene Richtwerte der anderen Parameter / Orientacyjne zalecane wartości pozostałych parametrów | | | | | | | | | | | | | | | | | | | | |
| Tlumivka Choke | 1 | 1 | 1 | 1 | 1 | 1 | 1 | 1 | 1 | 1 | 1 | 1 | 2 | 2 | 2 | 2 | 2 | 2 | 2 | 2 |
| Výlet SOFT START | 0,3 | 0,3 | 0,3 | 0,3 | 0,3 | 0,3 | 0,3 | 0,3 | 0,3 | 0,3 | 0,3 | 0,3 | 0,3 | 0,3 | 0,3 | 0,3 | 0,3 | 0,3 | 0,3 | 0,3 |
| | 0,3 | 0,3 | 0,3 | 0,3 | 0,3 | 0,3 | 0,3 | 0,3 | 0,3 | 0,3 | 0,3 | 0,3 | 0,3 | 0,3 | 0,3 | 0,3 | 0,3 | 0,3 | 0,3 | 0,3 |

| PROGRAM NO.1 500-0.6-$CO_2$ | | | | | | | | | | | | | | | | | | | | |
|---|---|---|---|---|---|---|---|---|---|---|---|---|---|---|---|---|---|---|---|---|
| | A | A | A | A | A | A | A | A | A | A | B | B | B | B | B | B | B | B | B | B |
| | 1 | 2 | 3 | 4 | 5 | 6 | 7 | 8 | 9 | 10 | 1 | 2 | 3 | 4 | 5 | 6 | 7 | 8 | 9 | 10 |
| m/min | - | - | - | - | - | - | - | - | - | - | - | - | - | - | - | - | - | - | - | - |
| | - | - | - | - | - | - | - | - | - | - | - | - | - | - | - | - | - | - | - | - |
| Orientační doporučené hodnoty ostatních parametrů / Orientačné odporúčané hodnoty ostatných parametrov / Reference advisory values of other parameters / Empfohlene Richtwerte der anderen Parameter / Orientacyjne zalecane wartości pozostałych parametrów | | | | | | | | | | | | | | | | | | | | |
| Tlumivka Choke | - | - | - | - | - | - | - | - | - | - | - | - | - | - | - | - | - | - | - | - |
| SOFT START | - | - | - | - | - | - | - | - | - | - | - | - | - | - | - | - | - | - | - | - |
| | - | - | - | - | - | - | - | - | - | - | - | - | - | - | - | - | - | - | - | - |
| | - | - | - | - | - | - | - | - | - | - | - | - | - | - | - | - | - | - | - | - |
| | - | - | - | - | - | - | - | - | - | - | - | - | - | - | - | - | - | - | - | - |
| | C | C | C | C | A | C | C | C | C | C | D | D | D | D | D | D | D | D | D | D |
| | 1 | 2 | 3 | 4 | 5 | 6 | 7 | 8 | 9 | 10 | 1 | 2 | 3 | 4 | 5 | 6 | 7 | 8 | 9 | 10 |
| m/min | - | - | - | - | - | - | - | - | - | - | - | - | - | - | - | - | - | - | - | - |
| | - | - | - | - | - | - | - | - | - | - | - | - | - | - | - | - | - | - | - | - |
| Orientační doporučené hodnoty ostatních parametrů / Orientačné odporúčané hodnoty ostatných parametrov / Reference advisory values of other parameters / Empfohlene Richtwerte der anderen Parameter / Orientacyjne zalecane wartości pozostałych parametrów | | | | | | | | | | | | | | | | | | | | |
| Tlumivka Choke | - | - | - | - | - | - | - | - | - | - | - | - | - | - | - | - | - | - | - | - |
| SOFT START | - | - | - | - | - | - | - | - | - | - | - | - | - | - | - | - | - | - | - | - |
| | - | - | - | - | - | - | - | - | - | - | - | - | - | - | - | - | - | - | - | - |
| | - | - | - | - | - | - | - | - | - | - | - | - | - | - | - | - | - | - | - | - |
| | - | - | - | - | - | - | - | - | - | - | - | - | - | - | - | - | - | - | - | - |

| PROGRAM NO.2 500-0.6-MIX | | | | | | | | | | | | | | | | | | | | |
|---|---|---|---|---|---|---|---|---|---|---|---|---|---|---|---|---|---|---|---|---|
| | A | A | A | A | A | A | A | A | A | A | B | B | B | B | B | B | B | B | B | B |
| | 1 | 2 | 3 | 4 | 5 | 6 | 7 | 8 | 9 | 10 | 1 | 2 | 3 | 4 | 5 | 6 | 7 | 8 | 9 | 10 |
| m/min | - | - | - | - | - | - | - | - | - | - | - | - | - | - | - | - | - | - | - | - |
| | - | - | - | - | - | - | - | - | - | - | - | - | - | - | - | - | - | - | - | - |
| Orientační doporučené hodnoty ostatních parametrů / Orientačné odporúčané hodnoty ostatných parametrov / Reference advisory values of other parameters / Empfohlene Richtwerte der anderen Parameter / Orientacyjne zalecane wartości pozostałych parametrów | | | | | | | | | | | | | | | | | | | | |
| Tlumivka Choke | - | - | - | - | - | - | - | - | - | - | - | - | - | - | - | - | - | - | - | - |
| SOFT START | - | - | - | - | - | - | - | - | - | - | - | - | - | - | - | - | - | - | - | - |
| | - | - | - | - | - | - | - | - | - | - | - | - | - | - | - | - | - | - | - | - |
| | - | - | - | - | - | - | - | - | - | - | - | - | - | - | - | - | - | - | - | - |
| | - | - | - | - | - | - | - | - | - | - | - | - | - | - | - | - | - | - | - | - |
| | C | C | C | C | A | C | C | C | C | C | D | D | D | D | D | D | D | D | D | D |
| | 1 | 2 | 3 | 4 | 5 | 6 | 7 | 8 | 9 | 10 | 1 | 2 | 3 | 4 | 5 | 6 | 7 | 8 | 9 | 10 |
| m/min | - | - | - | - | - | - | - | - | - | - | - | - | - | - | - | - | - | - | - | - |
| | - | - | - | - | - | - | - | - | - | - | - | - | - | - | - | - | - | - | - | - |
| Orientační doporučené hodnoty ostatních parametrů / Orientačné odporúčané hodnoty ostatných parametrov / Reference advisory values of other parameters / Empfohlene Richtwerte der anderen Parameter / Orientacyjne zalecane wartości pozostałych parametrów | | | | | | | | | | | | | | | | | | | | |
| Tlumivka Choke | - | - | - | - | - | - | - | - | - | - | - | - | - | - | - | - | - | - | - | - |
| SOFT START | - | - | - | - | - | - | - | - | - | - | - | - | - | - | - | - | - | - | - | - |
| | - | - | - | - | - | - | - | - | - | - | - | - | - | - | - | - | - | - | - | - |
| | - | - | - | - | - | - | - | - | - | - | - | - | - | - | - | - | - | - | - | - |
| | - | - | - | - | - | - | - | - | - | - | - | - | - | - | - | - | - | - | - | - |

## PROGRAM NO.3 500-0.8-$CO_2$

| | | | | | | | | | | | | | | | | | | | | |
|---|---|---|---|---|---|---|---|---|---|---|---|---|---|---|---|---|---|---|---|---|
| | A | A | A | A | A | A | A | A | A | A | B | B | B | B | B | B | B | B | B | B |
| | 1 | 2 | 3 | 4 | 5 | 6 | 7 | 8 | 9 | 10 | 1 | 2 | 3 | 4 | 5 | 6 | 7 | 8 | 9 | 10 |
| m/min | 3,2 | 3,6 | 4,2 | 4,6 | 5 | 5,5 | 6 | 7 | 7,9 | 9 | 9,9 | 10,3 | 10,7 | 11 | 11,2 | 11,5 | 12,3 | 13,8 | 15 | 15,7 |
| | 0,8 | 1 | 1 | 1,5 | 2 | 2 | 3 | 4 | 5 | 6 | 6 | 6 | 7 | 7 | 8 | 8 | 9 | 10 | 10 | 12 |
| Orientační doporučené hodnoty ostatních parametrů / Orientačné odporúčané hodnoty ostatných parametrov / Reference advisory values of other parameters / Empfohlene Richtwerte der anderen Parameter / Orientacyjne zalecane wartości pozostałych parametrów | | | | | | | | | | | | | | | | | | | | |
| Tlumivka<br>Choke | 1 | 1 | 1 | 1 | 1 | 1 | 1 | 1 | 1 | 1 | 1 | 1 | 1 | 2 | 2 | 2 | 2 | 2 | 2 | 2 |
| Výlet<br>SOFT START | 0,2 | 0,2 | 0,2 | 0,2 | 0,2 | 0,2 | 0,2 | 0,2 | 0,2 | 0,2 | 0,2 | 0,2 | 0,2 | 0,2 | 0,2 | 0,2 | 0,3 | 0,3 | 0,3 | 0,3 |
| | 0,2 | 0,2 | 0,2 | 0,2 | 0,2 | 0,2 | 0,2 | 0,2 | 0,2 | 0,2 | 0,2 | 0,2 | 0,2 | 0,2 | 0,2 | 0,2 | 0,2 | 0,2 | 0,2 | 0,2 |
| | 0,2 | 0,2 | 0,2 | 0,2 | 0,2 | 0,2 | 0,2 | 0,2 | 0,2 | 0,2 | 0,2 | 0,2 | 0,2 | 0,2 | 0,2 | 0,2 | 0,2 | 0,2 | 0,2 | 0,2 |
| | 0,2 | 0,2 | 0,2 | 0,2 | 0,2 | 0,2 | 0,2 | 0,2 | 0,2 | 0,2 | 0,2 | 0,2 | 0,2 | 0,2 | 0,2 | 0,2 | 0,2 | 0,2 | 0,2 | 0,2 |
| | C | C | C | C | A | C | C | C | C | C | D | D | D | D | D | D | D | D | D | D |
| | 1 | 2 | 3 | 4 | 5 | 6 | 7 | 8 | 9 | 10 | 1 | 2 | 3 | 4 | 5 | 6 | 7 | 8 | 9 | 10 |
| m/min | 15,7 | 16,5 | 16,8 | 17 | 17,4 | 17,8 | 18,1 | 18,5 | 19 | 19,6 | 20 | - | - | - | - | - | - | - | - | - |
| | 12 | 12 | 14 | 14 | 14 | 14 | 14 | 16 | 16 | 16 | 16 | - | - | - | - | - | - | - | - | - |
| Orientační doporučené hodnoty ostatních parametrů / Orientačné odporúčané hodnoty ostatných parametrov / Reference advisory values of other parameters / Empfohlene Richtwerte der anderen Parameter / Orientacyjne zalecane wartości pozostałych parametrów | | | | | | | | | | | | | | | | | | | | |
| Tlumivka<br>Choke | 3 | 3 | 3 | 3 | 3 | 3 | 3 | 3 | 3 | 3 | 3 | - | - | - | - | - | - | - | - | - |
| Výlet<br>SOFT START | 0,3 | 0,3 | 0,3 | 0,3 | 0,3 | 0,4 | 0,4 | 0,4 | 0,4 | 0,4 | 0,4 | - | - | - | - | - | - | - | - | - |
| | 0,2 | 0,2 | 0,2 | 0,2 | 0,2 | 0,2 | 0,2 | 0,2 | 0,2 | 0,2 | 0,2 | - | - | - | - | - | - | - | - | - |
| | 0,2 | 0,2 | 0,2 | 0,2 | 0,2 | 0,2 | 0,2 | 0,2 | 0,2 | 0,2 | 0,2 | - | - | - | - | - | - | - | - | - |
| | 0,2 | 0,2 | 0,2 | 0,2 | 0,2 | 0,2 | 0,2 | 0,2 | 0,2 | 0,2 | 0,2 | - | - | - | - | - | - | - | - | - |

## PROGRAM NO.4 500-0.8-MIX

| | | | | | | | | | | | | | | | | | | | | |
|---|---|---|---|---|---|---|---|---|---|---|---|---|---|---|---|---|---|---|---|---|
| | A | A | A | A | A | A | A | A | A | A | B | B | B | B | B | B | B | B | B | B |
| | 1 | 2 | 3 | 4 | 5 | 6 | 7 | 8 | 9 | 10 | 1 | 2 | 3 | 4 | 5 | 6 | 7 | 8 | 9 | 10 |
| m/min | 3,4 | 3,9 | 4,4 | 5,1 | 5,8 | 6,4 | 7,3 | 8,1 | 9,3 | 10,4 | 11,4 | 12,3 | 13,2 | 13,9 | 14,5 | 15 | 15,5 | 15,8 | 15,9 | 16,2 |
| | 0,8 | 1 | 1 | 1,5 | 2 | 2 | 2 | 2,5 | 3 | 3 | 4 | 5 | 5 | 6 | 6 | 8 | 8 | 8 | 10 | 10 |
| Orientační doporučené hodnoty ostatních parametrů / Orientačné odporúčané hodnoty ostatných parametrov / Reference advisory values of other parameters / Empfohlene Richtwerte der anderen Parameter / Orientacyjne zalecane wartości pozostałych parametrów | | | | | | | | | | | | | | | | | | | | |
| Tlumivka<br>Choke | 1 | 1 | 1 | 1 | 1 | 1 | 1 | 1 | 1 | 1 | 1 | 1 | 1 | 1 | 2 | 2 | 2 | 2 | 2 | 2 |
| Výlet<br>SOFT START | 0,2 | 0,2 | 0,2 | 0,2 | 0,2 | 0,2 | 0,2 | 0,2 | 0,2 | 0,2 | 0,2 | 0,2 | 0,2 | 0,2 | 0,2 | 0,2 | 0,2 | 0,2 | 0,2 | 0,2 |
| | 0,2 | 0,2 | 0,2 | 0,2 | 0,2 | 0,2 | 0,2 | 0,2 | 0,2 | 0,2 | 0,2 | 0,2 | 0,2 | 0,2 | 0,2 | 0,2 | 0,2 | 0,2 | 0,2 | 0,2 |
| | 0,2 | 0,2 | 0,2 | 0,2 | 0,2 | 0,2 | 0,2 | 0,2 | 0,2 | 0,2 | 0,2 | 0,2 | 0,2 | 0,2 | 0,2 | 0,2 | 0,2 | 0,2 | 0,2 | 0,2 |
| | 0,2 | 0,2 | 0,2 | 0,2 | 0,2 | 0,2 | 0,2 | 0,2 | 0,2 | 0,2 | 0,2 | 0,2 | 0,2 | 0,2 | 0,2 | 0,2 | 0,2 | 0,2 | 0,2 | 0,2 |
| | C | C | C | C | A | C | C | C | C | C | D | D | D | D | D | D | D | D | D | D |
| | 1 | 2 | 3 | 4 | 5 | 6 | 7 | 8 | 9 | 10 | 1 | 2 | 3 | 4 | 5 | 6 | 7 | 8 | 9 | 10 |
| m/min | 16,5 | 16,9 | 17,4 | 17,8 | 18,2 | 18,5 | 18,9 | 19,2 | 19,5 | 20 | - | - | - | - | - | - | - | - | - | - |
| | 10 | 10 | 12 | 12 | 14 | 14 | 14 | 14 | 16 | 16 | - | - | - | - | - | - | - | - | - | - |
| Orientační doporučené hodnoty ostatních parametrů / Orientačné odporúčané hodnoty ostatných parametrov / Reference advisory values of other parameters / Empfohlene Richtwerte der anderen Parameter / Orientacyjne zalecane wartości pozostałych parametrów | | | | | | | | | | | | | | | | | | | | |
| Tlumivka<br>Choke | 2 | 2 | 2 | 2 | 2 | 2 | 2 | 2 | 2 | 2 | - | - | - | - | - | - | - | - | - | - |
| Výlet<br>SOFT START | 0,2 | 0,2 | 0,2 | 0,2 | 0,2 | 0,2 | 0,2 | 0,2 | 0,2 | 0,2 | - | - | - | - | - | - | - | - | - | - |
| | 0,15 | 0,15 | 0,15 | 0,15 | 0,15 | 0,15 | 0,15 | 0,15 | 0,15 | 0,15 | - | - | - | - | - | - | - | - | - | - |
| | 0,2 | 0,2 | 0,2 | 0,2 | 0,2 | 0,2 | 0,2 | 0,2 | 0,2 | 0,2 | - | - | - | - | - | - | - | - | - | - |
| | 0,2 | 0,2 | 0,2 | 0,2 | 0,2 | 0,2 | 0,2 | 0,2 | 0,2 | 0,2 | - | - | - | - | - | - | - | - | - | - |

## PROGRAM NO.5 500-1,0-$CO_2$

| | | | | | | | | | | | | | | | | | | | | |
|---|---|---|---|---|---|---|---|---|---|---|---|---|---|---|---|---|---|---|---|---|
| | A | A | A | A | A | A | A | A | A | A | B | B | B | B | B | B | B | B | B | B |
| | 1 | 2 | 3 | 4 | 5 | 6 | 7 | 8 | 9 | 10 | 1 | 2 | 3 | 4 | 5 | 6 | 7 | 8 | 9 | 10 |
| m/min | 2,3 | 2,5 | 2,7 | 2,9 | 3,2 | 3,6 | 3,9 | 4,1 | 4,4 | 4,6 | 6,5 | 6,7 | 6,9 | 7,2 | 7,2 | 7,7 | 7,7 | 7,9 | 8,3 | 8,5 |
| | 1 | 1,5 | 1,5 | 2 | 2 | 3 | 3 | 4 | 4 | 5 | 5 | 6 | 6 | 6 | 7 | 7 | 7 | 8 | 8 | 8 |
| Orientační doporučené hodnoty ostatních parametrů / Orientačné odporúčané hodnoty ostatných parametrov / Reference advisory values of other parameters / Empfohlene Richtwerte der anderen Parameter / Orientacyjne zalecane wartości pozostałych parametrów | | | | | | | | | | | | | | | | | | | | |
| Tlumivka Choke | 1 | 1 | 1 | 1 | 1 | 1 | 1 | 1 | 1 | 1 | 1 | 1 | 1 | 1 | 1 | 1 | 1 | 1 | 1 | 1 |
| SOFT START | 0,2 | 0,2 | 0,2 | 0,2 | 0,2 | 0,2 | 0,2 | 0,2 | 0,2 | 0,2 | 0,2 | 0,2 | 0,2 | 0,2 | 0,2 | 0,2 | 0,2 | 0,2 | 0,2 | 0,2 |
| | 0,2 | 0,2 | 0,2 | 0,2 | 0,2 | 0,2 | 0,2 | 0,2 | 0,2 | 0,2 | 0,2 | 0,2 | 0,2 | 0,2 | 0,2 | 0,2 | 0,2 | 0,2 | 0,2 | 0,2 |
| | 0,2 | 0,2 | 0,2 | 0,2 | 0,2 | 0,2 | 0,2 | 0,2 | 0,2 | 0,2 | 0,2 | 0,2 | 0,2 | 0,2 | 0,2 | 0,2 | 0,2 | 0,2 | 0,2 | 0,2 |
| | 0,2 | 0,2 | 0,2 | 0,2 | 0,2 | 0,2 | 0,2 | 0,2 | 0,2 | 0,2 | 0,2 | 0,2 | 0,2 | 0,2 | 0,2 | 0,2 | 0,2 | 0,2 | 0,2 | 0,2 |
| | C | C | C | C | A | C | C | C | C | C | D | D | D | D | D | D | D | D | D | D |
| | 1 | 2 | 3 | 4 | 5 | 6 | 7 | 8 | 9 | 10 | 1 | 2 | 3 | 4 | 5 | 6 | 7 | 8 | 9 | 10 |
| m/min | 9,1 | 9,4 | 9,7 | 10,1 | 10,4 | 10,4 | 10,7 | 11 | 11,5 | 12,5 | 13 | 13,5 | 14,2 | 15,1 | 16,1 | 17,3 | 18,5 | 19,7 | 20 | |
| | 10 | 10 | 10 | 12 | 12 | 12 | 14 | 14 | 14 | 14 | 16 | 16 | 16 | 16 | 18 | 18 | 18 | 20 | 20 | |
| Orientační doporučené hodnoty ostatních parametrů / Orientačné odporúčané hodnoty ostatných parametrov / Reference advisory values of other parameters / Empfohlene Richtwerte der anderen Parameter / Orientacyjne zalecane wartości pozostałych parametrów | | | | | | | | | | | | | | | | | | | | |
| Tlumivka Choke | 1 | 2 | 2 | 2 | 2 | 3 | 3 | 3 | 3 | 3 | 3 | 3 | 3 | 3 | 3 | 3 | 3 | 3 | 3 | |
| SOFT START | 0,2 | 0,2 | 0,2 | 0,4 | 0,4 | 0,4 | 0,4 | 0,4 | 0,4 | 0,4 | 0,4 | 0,4 | 0,4 | 0,4 | 0,4 | 0,4 | 0,4 | 0,4 | 0,4 | |
| | 0,2 | 0,2 | 0,2 | 0,15 | 0,15 | 0,15 | 0,15 | 0,15 | 0,15 | 0,15 | 0,2 | 0,2 | 0,2 | 0,2 | 0,2 | 0,2 | 0,2 | 0,2 | 0,2 | |
| | 0,2 | 0,2 | 0,2 | 0,2 | 0,2 | 0,2 | 0,2 | 0,2 | 0,2 | 0,2 | 0,2 | 0,2 | 0,2 | 0,2 | 0,2 | 0,2 | 0,2 | 0,2 | 0,2 | 0,2 |
| | 0,2 | 0,2 | 0,2 | 0,2 | 0,2 | 0,2 | 0,2 | 0,2 | 0,2 | 0,2 | 0,2 | 0,2 | 0,2 | 0,2 | 0,2 | 0,2 | 0,2 | 0,2 | 0,2 | 0,2 |

## PROGRAM NO.7 500-1,2-$CO_2$

| | | | | | | | | | | | | | | | | | | | | |
|---|---|---|---|---|---|---|---|---|---|---|---|---|---|---|---|---|---|---|---|---|
| | A | A | A | A | A | A | A | A | A | A | B | B | B | B | B | B | B | B | B | B |
| | 1 | 2 | 3 | 4 | 5 | 6 | 7 | 8 | 9 | 10 | 1 | 2 | 3 | 4 | 5 | 6 | 7 | 8 | 9 | 10 |
| m/min | 2,2 | 2,3 | 2,5 | 2,8 | 3 | 3,3 | 3,4 | 3,7 | 4,3 | 4,9 | 5,1 | 5,7 | 6,3 | 7 | 7,6 | 8,2 | 8,8 | 9,3 | 9,6 | 9,9 |
| | 2 | 2,5 | 3 | 3 | 4 | 4 | 5 | 5 | 6 | 6 | 6 | 7 | 7 | 8 | 8 | 8 | 10 | 10 | 10 | 10 |
| Orientační doporučené hodnoty ostatních parametrů / Orientačné odporúčané hodnoty ostatných parametrov / Reference advisory values of other parameters / Empfohlene Richtwerte der anderen Parameter / Orientacyjne zalecane wartości pozostałych parametrów | | | | | | | | | | | | | | | | | | | | |
| Tlumivka Choke | 1 | 1 | 1 | 1 | 1 | 1 | 1 | 1 | 1 | 1 | 1 | 1 | 1 | 1 | 2 | 2 | 2 | 2 | 2 | 2 |
| SOFT START | 0,2 | 0,2 | 0,2 | 0,2 | 0,2 | 0,2 | 0,2 | 0,2 | 0,2 | 0,2 | 0,3 | 0,3 | 0,3 | 0,4 | 0,4 | 0,4 | 0,4 | 0,4 | 0,4 | 0,4 |
| | 0,2 | 0,2 | 0,2 | 0,2 | 0,2 | 0,2 | 0,2 | 0,2 | 0,25 | 0,25 | 0,25 | 0,25 | 0,25 | 0,25 | 0,25 | 0,25 | 0,25 | 0,25 | 0,25 | 0,25 |
| | 0,2 | 0,2 | 0,2 | 0,2 | 0,2 | 0,2 | 0,2 | 0,2 | 0,2 | 0,2 | 0,2 | 0,2 | 0,2 | 0,2 | 0,2 | 0,2 | 0,2 | 0,2 | 0,2 | 0,2 |
| | 0,2 | 0,2 | 0,2 | 0,2 | 0,2 | 0,2 | 0,2 | 0,2 | 0,2 | 0,2 | 0,2 | 0,2 | 0,2 | 0,2 | 0,2 | 0,2 | 0,2 | 0,2 | 0,2 | 0,2 |
| | C | C | C | C | A | C | C | C | C | C | D | D | D | D | D | D | D | D | D | D |
| | 1 | 2 | 3 | 4 | 5 | 6 | 7 | 8 | 9 | 10 | 1 | 2 | 3 | 4 | 5 | 6 | 7 | 8 | 9 | 10 |
| m/min | 10,1 | 10,3 | 10,6 | 10,8 | 11 | 11,2 | 11,4 | 11,6 | 11,8 | 12 | 12,2 | 12,4 | 12,5 | 12,7 | 13 | 13,3 | 13,5 | 13,9 | 14,5 | 15,3 |
| | 10 | 10 | 12 | 12 | 12 | 12 | 14 | 14 | 14 | 14 | 16 | 16 | 16 | 16 | 18 | 18 | 18 | 20 | 20 | 20 |
| Orientační doporučené hodnoty ostatních parametrů / Orientačné odporúčané hodnoty ostatných parametrov / Reference advisory values of other parameters / Empfohlene Richtwerte der anderen Parameter / Orientacyjne zalecane wartości pozostałych parametrów | | | | | | | | | | | | | | | | | | | | |
| Tlumivka Choke | 2 | 2 | 2 | 2 | 2 | 2 | 2 | 2 | 2 | 2 | 3 | 3 | 3 | 3 | 3 | 3 | 3 | 3 | 3 | 3 |
| SOFT START | 0,4 | 0,4 | 0,4 | 0,4 | 0,4 | 0,4 | 0,4 | 0,4 | 0,4 | 0,4 | 0,4 | 0,4 | 0,4 | 0,4 | 0,4 | 0,4 | 0,4 | 0,4 | 0,3 | 0,3 |
| | 0,25 | 0,25 | 0,2 | 0,2 | 0,2 | 0,2 | 0,2 | 0,2 | 0,15 | 0,15 | 0,15 | 0,15 | 0,15 | 0,15 | 0,15 | 0,15 | 0,15 | 0,15 | 0,1 | 0,1 |
| | 0,2 | 0,2 | 0,2 | 0,2 | 0,2 | 0,2 | 0,2 | 0,2 | 0,2 | 0,2 | 0,2 | 0,2 | 0,2 | 0,2 | 0,2 | 0,2 | 0,2 | 0,2 | 0,2 | 0,2 |
| | 0,2 | 0,2 | 0,2 | 0,2 | 0,2 | 0,2 | 0,2 | 0,2 | 0,2 | 0,2 | 0,2 | 0,2 | 0,2 | 0,2 | 0,2 | 0,2 | 0,2 | 0,2 | 0,2 | 0,2 |

### PROGRAM NO.6 500-1,0-MIX

| | A | A | A | A | A | A | A | A | A | A | B | B | B | B | B | B | B | B | B | B |
|---|---|---|---|---|---|---|---|---|---|---|---|---|---|---|---|---|---|---|---|---|
| | 1 | 2 | 3 | 4 | 5 | 6 | 7 | 8 | 9 | 10 | 1 | 2 | 3 | 4 | 5 | 6 | 7 | 8 | 9 | 10 |
| m/min | 2,6 | 3,2 | 3,9 | 4,5 | 5,2 | 6,6 | 7,3 | 7,8 | 8 | 8,3 | 8,5 | 8,5 | 8,8 | 8,9 | 8,9 | 9,1 | 9,5 | 9,8 | 9,8 | 10 |
| | 1 | 1,5 | 2 | 2 | 3 | 4 | 4 | 5 | 5 | 6 | 6 | 6 | 7 | 7 | 7 | 7 | 8 | 8 | 8 | 8 |
| Orientační doporučené hodnoty ostatních parametrů / Orientačné odporúčané hodnoty ostatných parametrov / Reference advisory values of other parameters / Empfohlene Richtwerte der anderen Parameter / Orientacyjne zalecane wartości pozostałych parametrów | | | | | | | | | | | | | | | | | | | | |
| Tlumivka Choke | 1 | 1 | 1 | 1 | 1 | 1 | 1 | 1 | 1 | 1 | 1 | 1 | 1 | 1 | 1 | 1 | 1 | 1 | 1 | 1 |
| Výlet SOFT START | 0,1 | 0,1 | 0,1 | 0,1 | 0,1 | 0,1 | 0,1 | 0,1 | 0,1 | 0,2 | 0,2 | 0,2 | 0,2 | 0,2 | 0,3 | 0,3 | 0,3 | 0,3 | 0,3 | 0,3 |
| | 0,2 | 0,2 | 0,2 | 0,2 | 0,2 | 0,2 | 0,2 | 0,2 | 0,2 | 0,2 | 0,2 | 0,2 | 0,2 | 0,2 | 0,2 | 0,2 | 0,2 | 0,2 | 0,2 | 0,2 |
| | 0,2 | 0,2 | 0,2 | 0,2 | 0,2 | 0,2 | 0,2 | 0,2 | 0,2 | 0,2 | 0,2 | 0,2 | 0,2 | 0,2 | 0,2 | 0,2 | 0,2 | 0,2 | 0,2 | 0,2 |
| | 0,2 | 0,2 | 0,2 | 0,2 | 0,2 | 0,2 | 0,2 | 0,2 | 0,2 | 0,2 | 0,2 | 0,2 | 0,2 | 0,2 | 0,2 | 0,2 | 0,2 | 0,2 | 0,2 | 0,2 |
| | C | C | C | C | A | C | C | C | C | C | D | D | D | D | D | D | D | D | D | D |
| | 1 | 2 | 3 | 4 | 5 | 6 | 7 | 8 | 9 | 10 | 1 | 2 | 3 | 4 | 5 | 6 | 7 | 8 | 9 | 10 |
| m/min | 10,4 | 10,6 | 10,9 | 11,2 | 11,4 | 11,6 | 11,7 | 11,8 | 12,2 | 12,5 | 12,9 | 13,6 | 14,8 | 16,5 | 18,5 | 20 | | | | |
| | 8 | 10 | 10 | 10 | 10 | 10 | 12 | 12 | 12 | 12 | 14 | 14 | 16 | 16 | 18 | 20 | | | | |
| Orientační doporučené hodnoty ostatních parametrů / Orientačné odporúčané hodnoty ostatných parametrov / Reference advisory values of other parameters / Empfohlene Richtwerte der anderen Parameter / Orientacyjne zalecane wartości pozostałych parametrów | | | | | | | | | | | | | | | | | | | | |
| Tlumivka Choke | 2 | 2 | 2 | 2 | 2 | 2 | 2 | 2 | 2 | 2 | 2 | 2 | 3 | 3 | 3 | 3 | | | | |
| Výlet SOFT START | 0,3 | 0,3 | 0,3 | 0,3 | 0,3 | 0,3 | 0,3 | 0,3 | 0,3 | 0,3 | 0,3 | 0,3 | 0,3 | 0,3 | 0,3 | 0,3 | | | | |
| | 0,2 | 0,2 | 0,2 | 0,2 | 0,15 | 0,15 | 0,15 | 0,15 | 0,15 | 0,15 | 0,15 | 0,15 | 0,15 | 0,15 | 0,15 | 0,15 | | | | |
| | 0,2 | 0,2 | 0,2 | 0,2 | 0,2 | 0,2 | 0,2 | 0,2 | 0,2 | 0,2 | 0,2 | 0,2 | 0,2 | 0,2 | 0,2 | 0,2 | | | | |
| | 0,2 | 0,2 | 0,2 | 0,2 | 0,2 | 0,2 | 0,2 | 0,2 | 0,2 | 0,2 | 0,2 | 0,2 | 0,2 | 0,2 | 0,2 | 0,2 | | | | |

### PROGRAM NO.8 500-1,2-MIX

| | A | A | A | A | A | A | A | A | A | A | B | B | B | B | B | B | B | B | B | B |
|---|---|---|---|---|---|---|---|---|---|---|---|---|---|---|---|---|---|---|---|---|
| | 1 | 2 | 3 | 4 | 5 | 6 | 7 | 8 | 9 | 10 | 1 | 2 | 3 | 4 | 5 | 6 | 7 | 8 | 9 | 10 |
| m/min | 2,4 | 2,8 | 3,3 | 3,8 | 4,1 | 4,8 | 5,4 | 6 | 6,4 | 6,9 | 7,3 | 7,6 | 7,8 | 8 | 8,2 | 8,4 | 8,7 | 8,8 | 9,1 | 9,4 |
| | 2 | 2 | 2,5 | 3 | 3 | 4 | 5 | 5 | 5 | 6 | 6 | 6 | 8 | 8 | 8 | 8 | 10 | 10 | 10 | 10 |
| Orientační doporučené hodnoty ostatních parametrů / Orientačné odporúčané hodnoty ostatných parametrov / Reference advisory values of other parameters / Empfohlene Richtwerte der anderen Parameter / Orientacyjne zalecane wartości pozostałych parametrów | | | | | | | | | | | | | | | | | | | | |
| Tlumivka Choke | 1 | 1 | 1 | 1 | 1 | 1 | 1 | 1 | 1 | 1 | 1 | 1 | 1 | 1 | 2 | 2 | 2 | 2 | 2 | 2 |
| Výlet SOFT START | 0,2 | 0,3 | 0,3 | 0,3 | 0,3 | 0,3 | 0,3 | 0,3 | 0,3 | 0,3 | 0,3 | 0,3 | 0,3 | 0,3 | 0,3 | 0,3 | 0,3 | 0,3 | 0,3 | 0,4 |
| | 0,25 | 0,25 | 0,25 | 0,25 | 0,25 | 0,25 | 0,25 | 0,25 | 0,25 | 0,25 | 0,25 | 0,25 | 0,25 | 0,25 | 0,25 | 0,25 | 0,25 | 0,2 | 0,2 | 0,2 |
| | 0,2 | 0,2 | 0,2 | 0,2 | 0,2 | 0,2 | 0,2 | 0,2 | 0,2 | 0,2 | 0,2 | 0,2 | 0,2 | 0,2 | 0,2 | 0,2 | 0,2 | 0,2 | 0,2 | 0,2 |
| | 0,2 | 0,2 | 0,2 | 0,2 | 0,2 | 0,2 | 0,2 | 0,2 | 0,2 | 0,2 | 0,2 | 0,2 | 0,2 | 0,2 | 0,2 | 0,2 | 0,2 | 0,2 | 0,2 | 0,2 |
| | C | C | C | C | A | C | C | C | C | C | D | D | D | D | D | D | D | D | D | D |
| | 1 | 2 | 3 | 4 | 5 | 6 | 7 | 8 | 9 | 10 | 1 | 2 | 3 | 4 | 5 | 6 | 7 | 8 | 9 | 10 |
| m/min | 9,8 | 10,2 | 10,5 | 10,6 | 10,7 | 10,9 | 11,1 | 11,3 | 11,6 | 11,9 | 12,2 | 12,6 | 13,2 | 14 | 15,2 | 16,4 | 17,5 | 18,4 | 19,5 | |
| | 12 | 12 | 12 | 12 | 14 | 14 | 14 | 16 | 16 | 16 | 16 | 18 | 18 | 18 | 20 | 20 | 20 | 20 | 20 | 25 |
| Orientační doporučené hodnoty ostatních parametrů / Orientačné odporúčané hodnoty ostatných parametrov / Reference advisory values of other parameters / Empfohlene Richtwerte der anderen Parameter / Orientacyjne zalecane wartości pozostałych parametrów | | | | | | | | | | | | | | | | | | | | |
| Tlumivka Choke | 2 | 2 | 2 | 2 | 2 | 2 | 2 | 2 | 2 | 2 | 3 | 3 | 3 | 3 | 3 | 3 | 3 | 3 | 3 | 3 |
| Výlet SOFT START | 0,4 | 0,4 | 0,4 | 0,4 | 0,4 | 0,4 | 0,4 | 0,4 | 0,4 | 0,4 | 0,4 | 0,4 | 0,4 | 0,3 | 0,3 | 0,3 | 0,3 | 0,3 | 0,3 | 0,3 |
| | 0,2 | 0,2 | 0,2 | 0,2 | 0,2 | 0,2 | 0,2 | 0,15 | 0,15 | 0,15 | 0,15 | 0,15 | 0,15 | 0,15 | 0,15 | 0,15 | 0,15 | 0,15 | 0,15 | 0,15 |
| | 0,2 | 0,2 | 0,2 | 0,2 | 0,2 | 0,2 | 0,2 | 0,2 | 0,2 | 0,2 | 0,2 | 0,2 | 0,2 | 0,2 | 0,2 | 0,2 | 0,2 | 0,2 | 0,2 | 0,2 |
| | 0,2 | 0,2 | 0,2 | 0,2 | 0,2 | 0,2 | 0,2 | 0,2 | 0,2 | 0,2 | 0,2 | 0,2 | 0,2 | 0,2 | 0,2 | 0,2 | 0,2 | 0,2 | 0,2 | 0,2 |

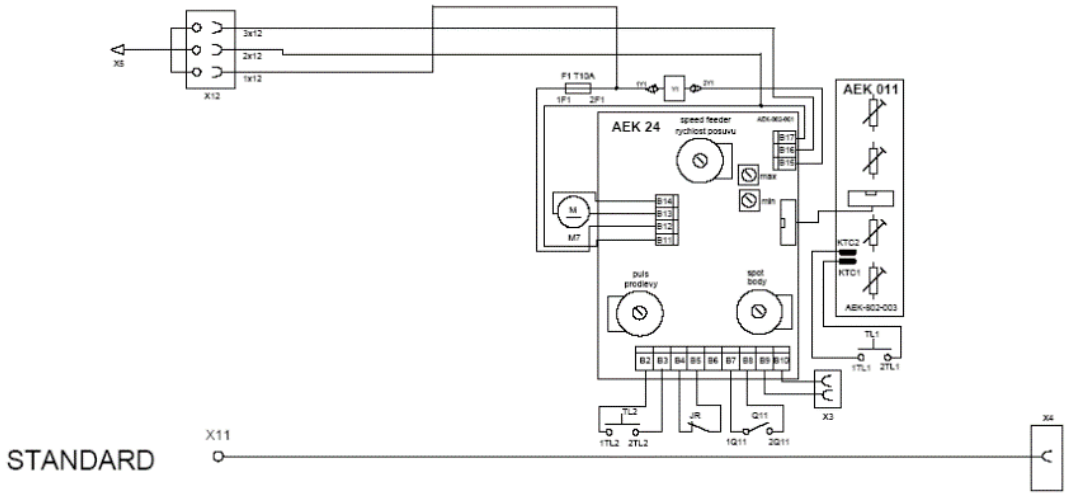


VF-04-700-558

---

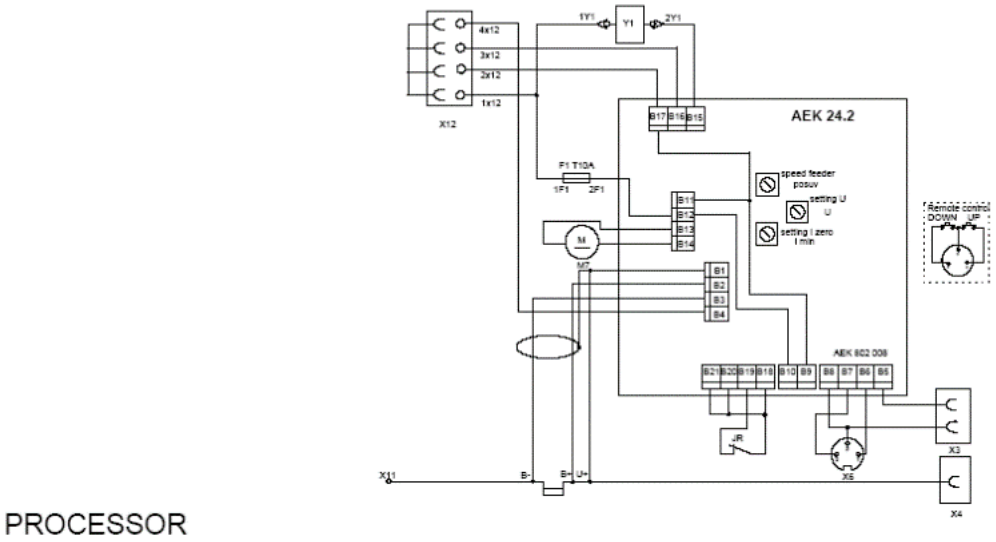


VF-04-700-562

## Seznam náhradních dílů / List of spare parts

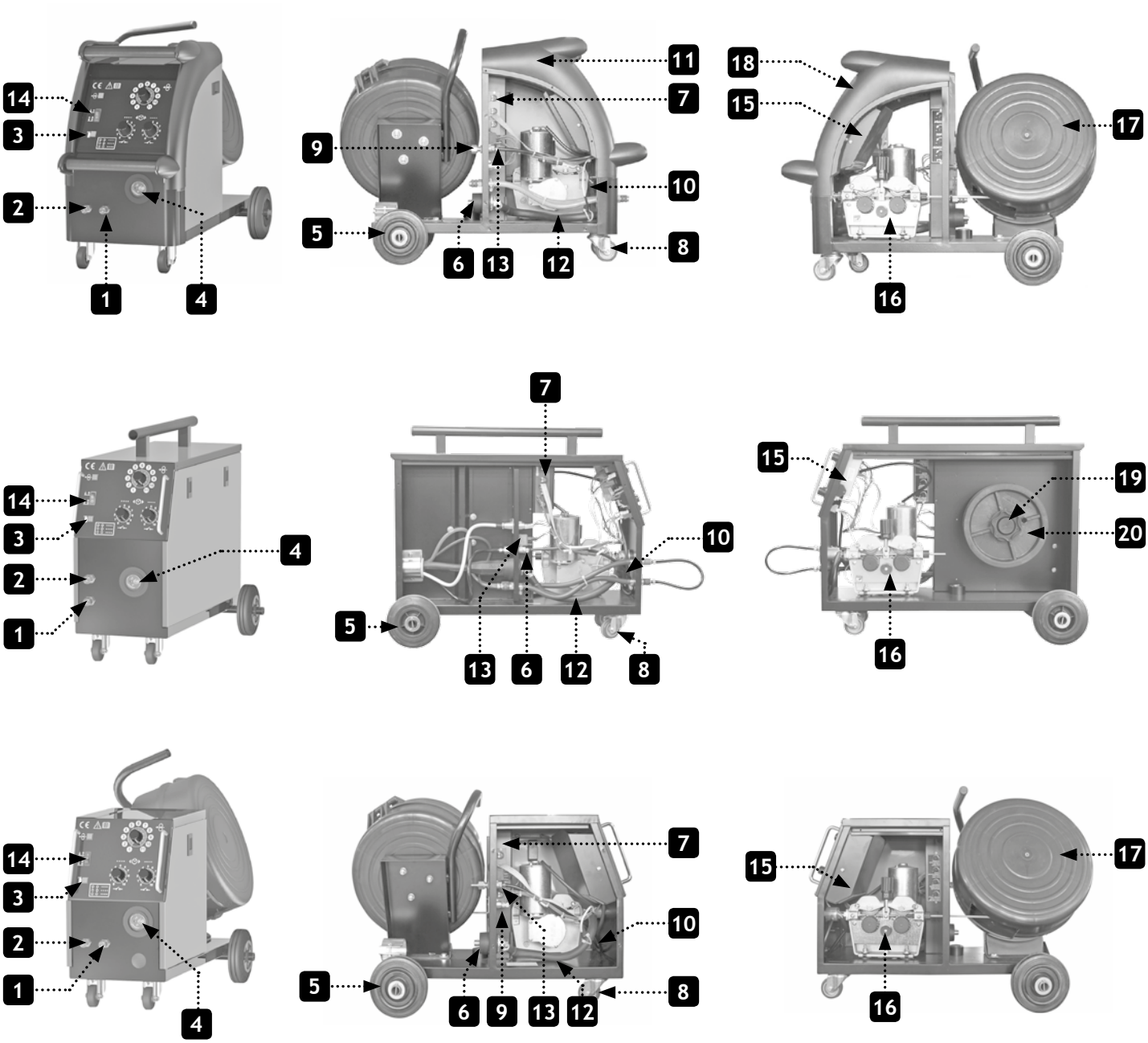


| Pos. | CZ | EN | Pro varianty / for variants | Nr. |
|---|---|---|---|---|
| 1 | Rychl. voda červená | Gladhand water red Wheel fixed KIT 180-456 | | 30495 |
| 2 | Rychl. voda modrá | Gladhand water blue Refrigerator KIT 456 | | 30496 |
| 3 | Tlačítko 3 A červené | Button 3 A red | STANDARD | 30223 |
| 4 | Zásuvka EURO kopmplet K2-4 processor | EURO socket complete K2-4 processor | | 10703 |
| 5 | Kolo pevné K2-4-3-4 | Wheel fixed K2-4-3-4 | | 30221 |
| 6 | Rychl. zástrčka panel 70-95 čtyřhran | Gladhand socket panel 70-95 square | | 30412 |
| 7 | Plošný spoj AEK-802-003 | PCB AEK-802-003 | STANDARD | 10350 |
| 8 | Kolo otočné K2-4-3-4 | Wheel swivel K2-4-3-4 | | 30034 |
| 9 | Konektor 3kol. zásuvka XLR187 | 3-pin-type plug - socket XLR187 | | 30041 |
| 9 | Konektor 4kol. zásuvka XLR187B | 4-pin-type plug - socket XLR187B | PROCESSOR / SYNERGIC | 31648 |
| 10 | Bočník 400 A na Processor K2-4,4-4 | Shunt 400 A Processor K2-4,4-4 | PROCESSOR / SYNERGIC | 10758 |
| 11 | Oblouk levý př. K2-4 | Plastic cover left K2-4 | 4000/5000 | 11711 |
| 12 | Jazýčkové relé | Reed relay | | 12508 |
| 13 | Ventil plynový 24 V s filtrem AC ZCQ-20B-8 | Gas valve 24 V with filter AC ZCQ-20B-8 | | 32313 |
| 14 | Spínač kolíbkový 16 A/250 V | Toggle switch 16 A/250 V | STANDARD | 30135 |
| 15 | Plošný spoj AEK- 24 | PCB AEK- 24 | STANDARD | 10186 |
| 15 | Plošný spoj AEK-802-008 | PCB AEK-802-008 | PROCESSOR / SYNERGIC | 11941 |
| 16 | Posuv 4kl. velký smont., velký motor | Wire feeder big, 4 rolls, big motor | | 10115 |
| 17 | Kryt cívky 2-4E | Cover spool 2-4E | 2-2, 2-4 „E“ | 10628 |
| 18 | Oblouk pravý př. K2-4 | Plastic cover right K2-4 | 4000/5000 | 11710 |
| 19 | Držák cívky AEK-COOP standard | Holder of spool AEK-COOP standard | | 30009 |
| 20 | Redukce cívky adaptér AEK | Holder of spool - adaptor AEK | | 30096 |
| - | Plošný spoj AEK-802-013 | PCB AEK-802-013 | SYNERGIC | 10471 |

| Osvědčení o jakosti a kompletnosti výrobku / Testing certificate | | | |
|---|---|---|---|
| Název a typ výrobku<br>Type | ◯ **STANDARD** | ◯ **PROCESSOR** | ◯ **SYNERGIC** |
| | ◯ **KIT 2** | ◯ | ◯ |

| | |
|---|---|
| Výrobní číslo stroje:<br>Serial number: | Výrobní číslo PCB:<br>Serial number PCB: |

| | |
|---|---|
| Výrobce<br>Producer | |
| Razítko OTK<br>Stamp of Technical Control Department | |
| Datum výroby<br>Date of production | |
| Kontroloval<br>Inspected by | |

| Záruční list / Warranty certificate | |
|---|---|
| Datum prodeje<br>Date of sale | |
| Razítko a podpis prodejce<br>Stamp and signature of seller | |

| Záznam o provedeném servisním zákroku / Repair note | | | |
|---|---|---|---|
| Datum převzetí servisem<br>Date of take-over | Datum provedení opravy<br>Date of repair | Číslo reklamačního protokolu<br>Number of repair form | Podpis pracovníka<br>Signature of serviceman |
| | | | |
| | | | |
| | | | |

Výrobce si vyhrazuje právo na změnu.
The producer reserves the right to modification.