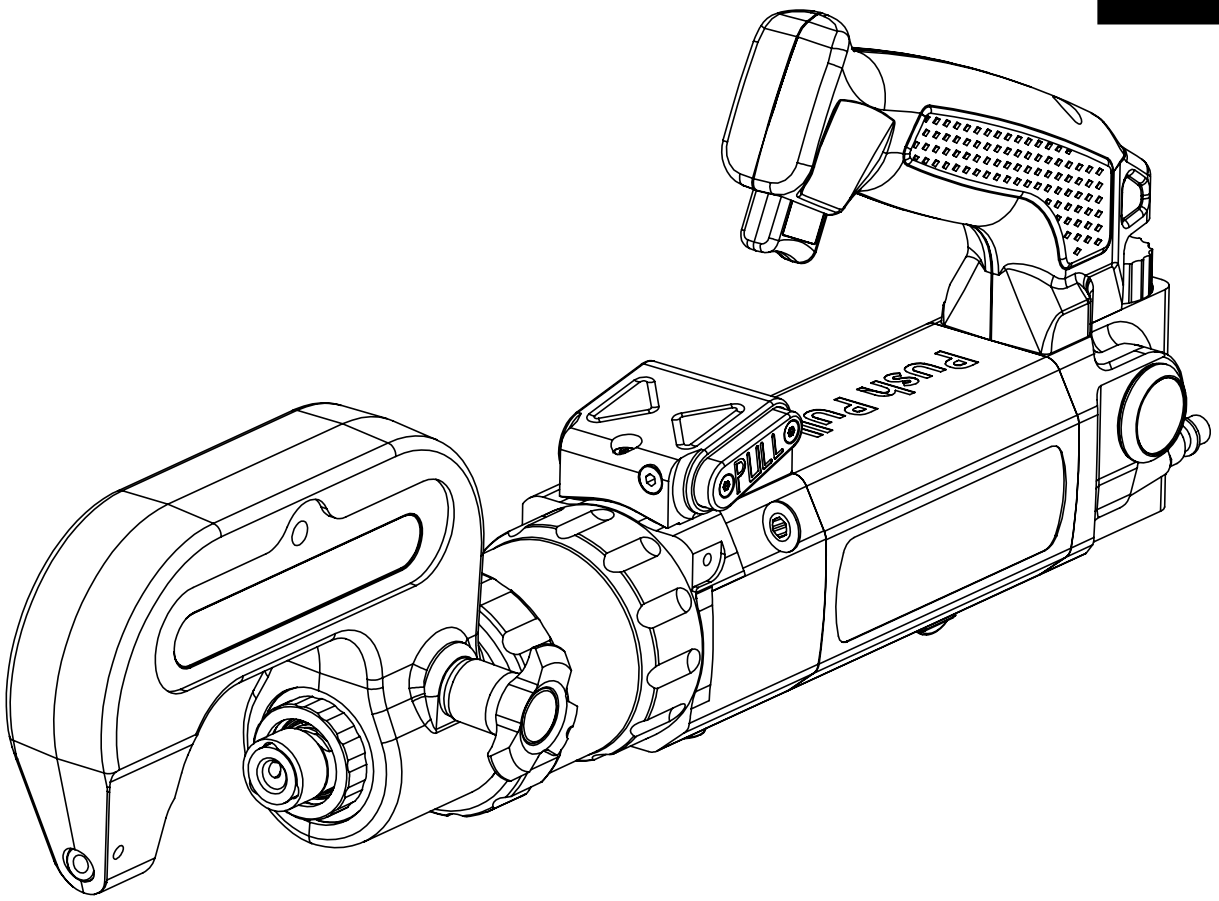

GYSPRESS 10T PUSH PULL

FR 2-4 / 5-11 / 61-64

EN 2-4 / 12-18 / 61-64

DE 2-4 / 19-25 / 61-64

ES 2-4 / 26-32 / 61-64

NL 2-4 / 33-39 / 61-64

JP 2-4 / 40-46 / 61-64

RU 2-4 / 47-53 / 61-64

IT 2-4 / 54-60 / 61-64

73502-V1-03/07/2020

GYSPRESS 10T PUSH PULL

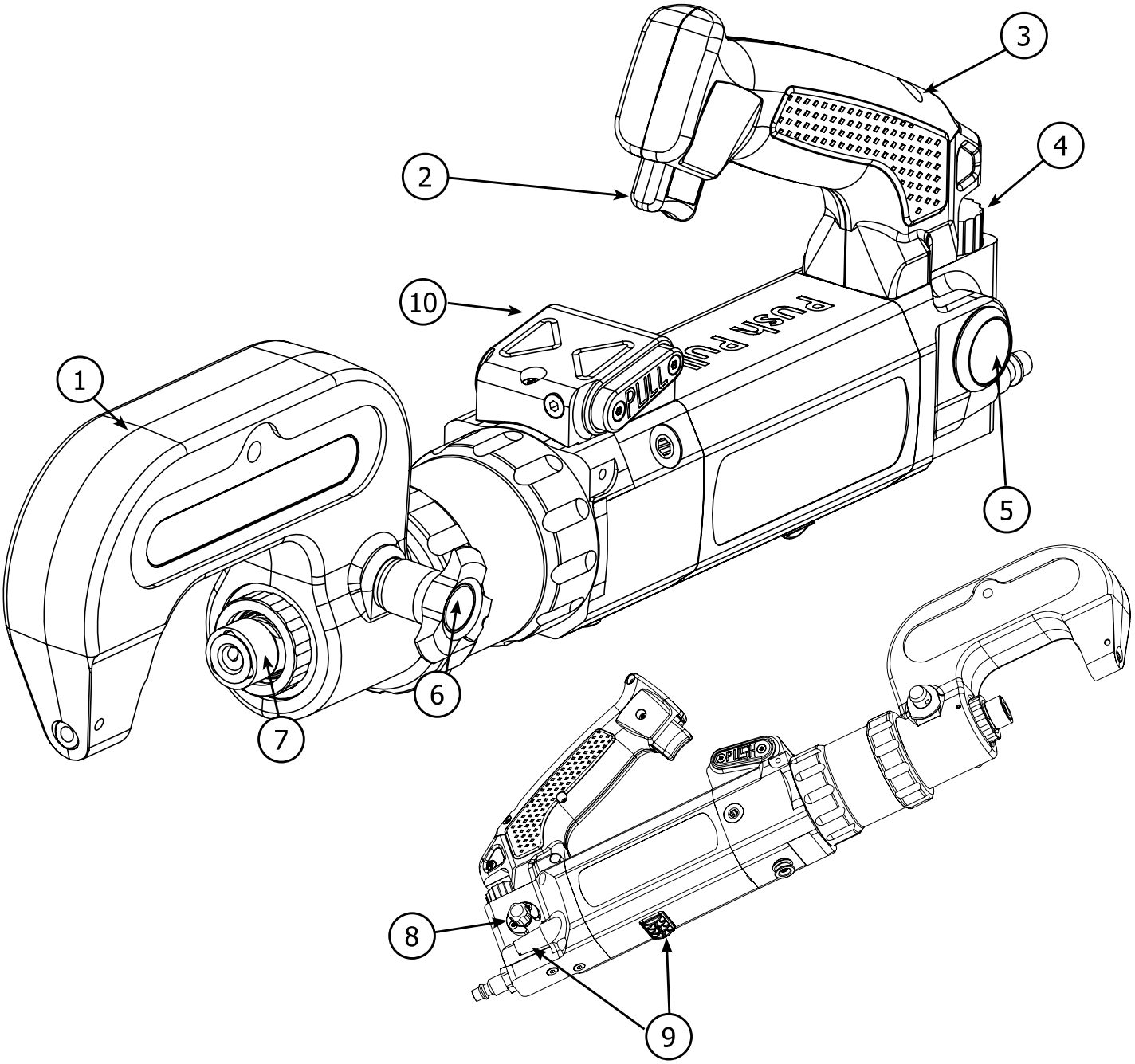

	FR	EN	DE	ES	NL	JP	RU	IT
1	Bras en acier	Steel arm	Nietbügel	Brazo de acero	C Arm	スチールアーム	Стальные плечи	Braccio in acciaio
2	Gâchette	Trigger	Steuerungtrigger	Gatillo	Aandruk knop	トリガー	Курок	Pulsante di avanzamento
3	Poignée	Handle	Handgriff	Mango	Handvat	ハンドル	Ручка	Impugnatura
4	Réglage pression	Pressure control	Druckregelung	Ajuste de la presión	Instelknop drukregelaar	圧力 コントロール	Регулировка давления	Regolazione pressione
5	Manomètre	Regulator	Manometer	Manómetro	Drukmeter	レギュレーター	Манометр	Manometro
6	Goupille de blocage	Locking pin	Nietbügelarretierung	Pasador de bloqueo	Borgpen	ロックピン	Предохранительная чека	Perno di bloccaggio
7	Axe vérin	Jack axle	Werkzeugaufnahme	Eje cilíndrico	Bevestigingpunt matrijs	シリンダー軸	Ось цилиндра	Asse del pistone
8	Réglage vitesse	Speed control	Regelung Werkzeuggeschwindigkeit	Ajuste de la velocidad	Snelheids regelknop	スピード コントロール	Регулировка скорости	Regolazione velocità
9	Échappement d'air	Air output	Luftauslaß	Fuga de aire	Luchtuitlaat	排気口	Вытекание воздуха	Scarico dell'aria
10	Sélection mode Push et Pull	Push and Pull mode selection	Auswahl des Push und Pull-Modus	Selección de los modos «Push and Pull» (empujar y tirar)	Duw- en trekmodus selecteren	プッシュ＆プルモード選択	Выбор режима нажима и вытягивания	Selezione modalità Push e Pull

GYSPRESS 10T PUSH PULL

COMPOSITION DU KIT D'EMBOUTS / CONNECTOR KIT CONTENTS / ZUSAMMENSTELLUNG DES MATRIZEN-KITS / COMPOSICIÓN DEL KIT DE BOQUILLAS / СОСТАВ НАБОРА НАСАДОК / INHOUD MATRIJZEN KIT /コネクターキットの内容 / COMPOSIZIONE DEL KIT DI TERMINALI

- Matrices pour rivet auto-perçants (RAP) Ø 3,3 mm - Matrix for self-piercing rivets (RAP) Ø 3.3 mm - Matrizen für Stanznieten (RAP) Ø 3,3 mm - Matrices para remaches autoperforantes Ø 3,3 mm	- Матрицы для самопроникающих заклепок (RAP) Ø 3,3 мм - Matrijs voor zelf perforerende ponsnagel (RAP) Ø 3.3 mm - セルフピアシング用マトリックス(RAP) Ø 3.3 mm - Matrice per rivetto auto-perforante (RAP) Ø 3,3 mm		
- Matrices pour rivet auto-perçants (RAP) Ø 5,3 mm - Matrix for self-piercing rivets (RAP) Ø 5.3 mm - Matrizen für Stanznieten (RAP) Ø 5,3 mm - Matrices para remaches autoperforantes Ø 5,3 mm	- Матрицы для самопроникающих заклепок (RAP) Ø 5,3 мм - Matrijs voor zelf perforerende ponsnagel (RAP) Ø 5.3 mm - セルフピアシング用マトリックス(RAP) Ø 5.3 mm - Matrice per rivetto auto-perforante (RAP) Ø 5,3 mm		
- Mandrin d'extraction - Extraction mandrel - Auspress-Satz - Mandril de extracción	- Муфта для извлечения - Matrijs voor verwijderen ponsnagels - 摘出マンドレル - Mandrino d'estrazione		
- Mandrin de poinçonnage - Punching mandrel - Vorstanz-/Kalibrierungssatz - Mandril de perforación	- Муфта для пробивания отверстий - Matrijs voor ponsen - パンチング・マンドレル - Mandrino di punzonatura		
- Matrices pour rivet Flow-Form (RFF) - Matrix for Flow-Form rivet (RFF) - Matrizen für Fließformnieten (RFF) - Matrices para remache Flow-Form	- Матрицы для заклепок Flow-Form (RFF) - Matrijs voor flow form ponsnagels (RFF) - フローフォーム用マトリックス(RFF) - Matrice per rivetto Flow-Form (RFF)		
- Aplanissement des tôles - Sheet flattening - Bleck-Rückverformung - Aplanamiento de las chapas	- Afvlakking van plaatwerk - 鋼板平坦化 - Выравнивание листового металла - Appiattimento delle lamiere		
- Rallonge - Extension - Verlängerungsadapter - Prolongador	- Verlengstuk - エクステンション - Удлинитель - Prolunga		
- Jeu de clés de montage - Kit of assembly keys - Montageschlüssel-Set - Juego de llaves de montaje	- Набор сборочных ключей - Montage sleutel - 組み立て用キーセット - Set di montaggio		
- Bagues de rechange en élastomère - Spare Elastomer ring - Ersatz-Dämpferringe - Anillas de recambio de elastómero	- Запасные кольца из эластомера - Reserve rubber dempingsring - スペアゴム製リング - Anelli di ricambio in elastomero	x2	
- Pointeau centreur - The center punch - Zentrier-Stempel - Punzón de centrado	- Пунсон центратор - Centerpons - センターパンチ - Punteruolo di centraggio		

BRAS DE RIVETAGE / RIVETING ARM / NIETBÜGEL / BRAZO DE REMACHADO / C BEUGELS / ПЛЕЧИ ДЛЯ КЛЕПКИ / リベット作業アーム / BRACCIO DI RIVETTAGGIO

HR110

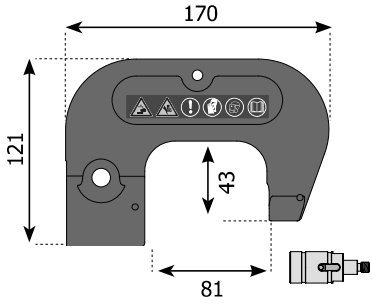

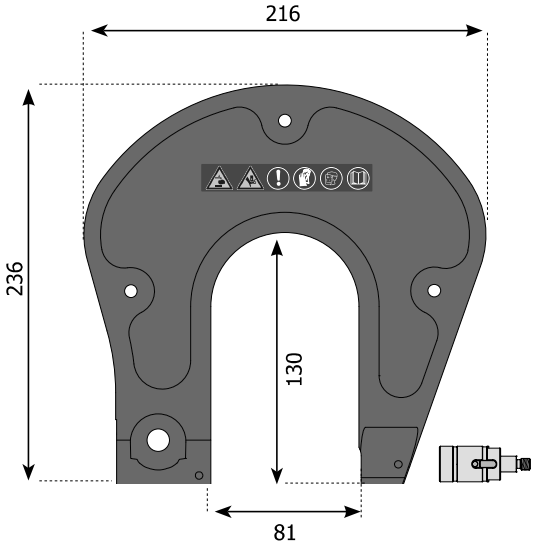

HR210

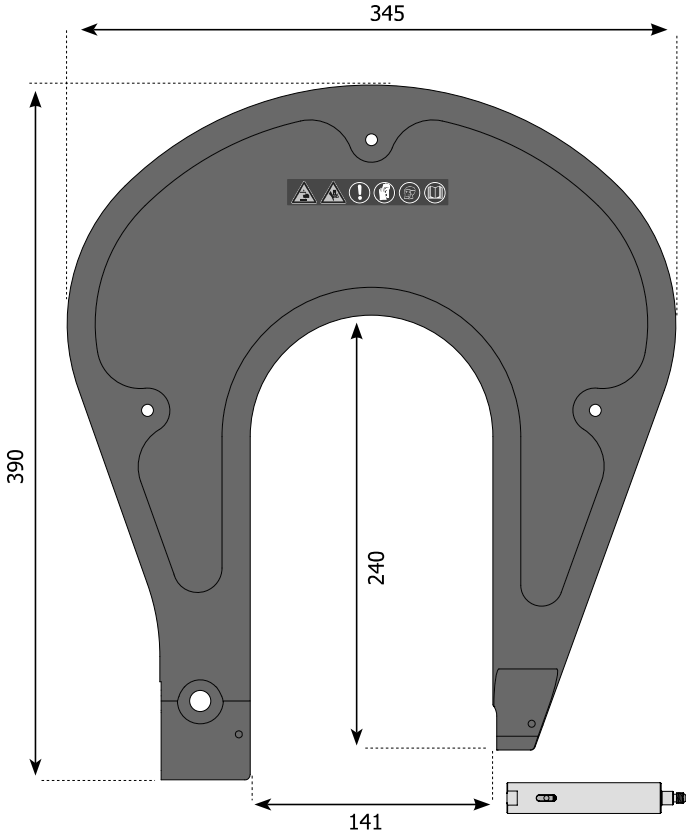

HR310

	HR110	HR210	HR310
Référence / Reference / Art.-Nr. / Referencia / Артикул / Artikelnummer / 商品番号 / Codice	063310	063327	063334
Longueur / Length / Gesamthöhe / Longitud / Длина / Lengte totaal / 長さ/ Lunghezza	121 mm	236 mm	390 mm
Largeur / Width / Stärke / Anchura / Dikte / Ширина / totaal / 幅 / Larghezza	50 mm	50 mm	50 mm
Hauteur / Height / Gesamtbreite / Altura / Высота / Breedte totaal / 高さ / Altezza	170 mm	216 mm	345 mm
Ouverture de l'étrier / Caliper opening / Öffnungsweite / Abertura del brazo / Ширина открытия скобы / Opening breedte / キャリパー開口幅 / Apertura braccio	81 mm	81 mm	141 mm
Profondeur de l'ouverture / Opening depth / Einstichtiefe / Profundidad de la abertura / Глубина открытия / Opening diepte / 開口奥行き / Profondità dell'apertura	40 mm	130 mm	240 mm
Poids / Weight / Gewicht / Peso / Bec / Gewicht / 重量 / Peso	3 kg	5.4 kg	12 kg

This manual contains safety and operating instructions. Read it carefully before using the device for the first time and keep it in a safe place for future reference.

DESCRIPTION

Thank you for your choice In order to get the maximum benefit from your purchase, please read carefully the following instructions:
The riveting machine has been especially made for the main types of rivets used and homologated for car body repair:
• Self-piercing rivets
• Flow-form rivets

HANDLING

The correct handling procedures are explained in this user manual. It is vital that the GYS operating procedures are followed.

COMPRESSED AIR CONNECTION

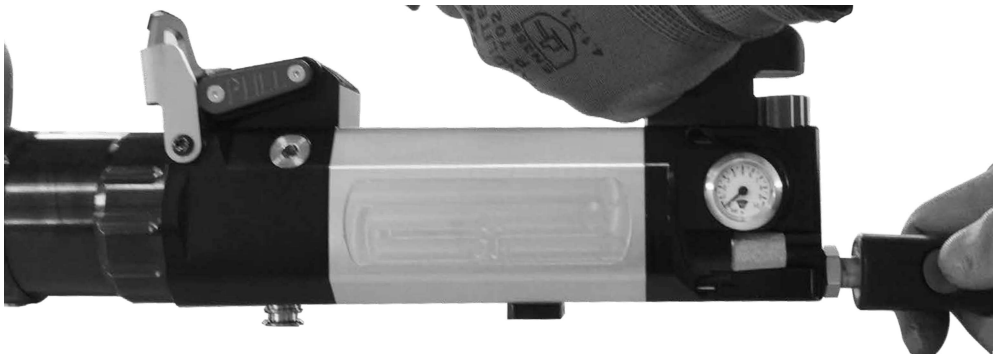

Maximum air pressure:
Make sure that the air pressure does not exceed 10 bar.
Clean compressed air:
Make sure you use only clean and dry compressed air for supply the riveting machine. Moisture and impurities can lead to system failures and/or damages on the product.

SETTING UP AN ARM

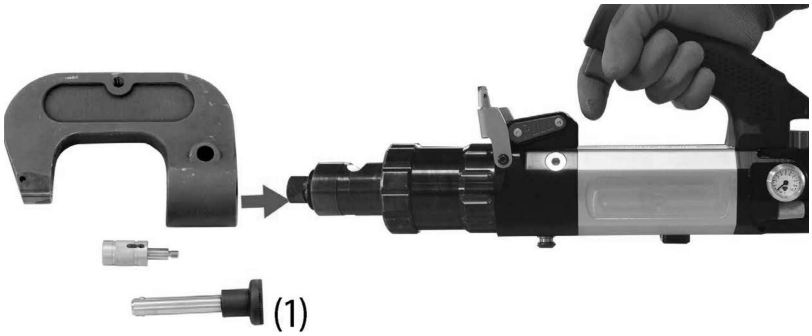

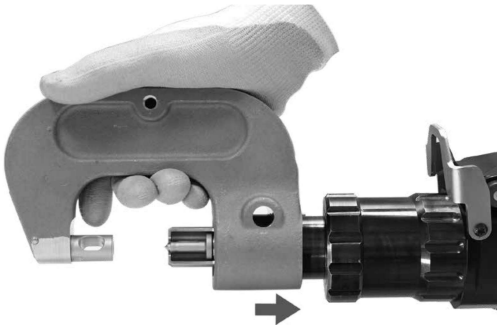

Choose an arm and prepare the locking pin (1). Put the arm with care on the riveting machine nose, making sure that the 2 points of reference are aligned.
For the implementation of large arms (eg, HR210, HR310), it is advisable to lay the arms flat on a table and bring the nose of the riveting machine in the arm's orifice.

For more details see the video:

As soon as the arm is on the riveting machine, push the locking pin in the hole.
The axle locks itself automatically and must not be allowed to become unlocked.

⚠ The locking pin must be clean with no damage. Do not use any damaged pin.

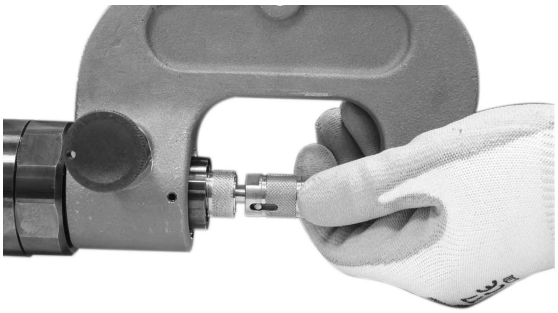

Using the screw, fasten the extension supplied with the arm.

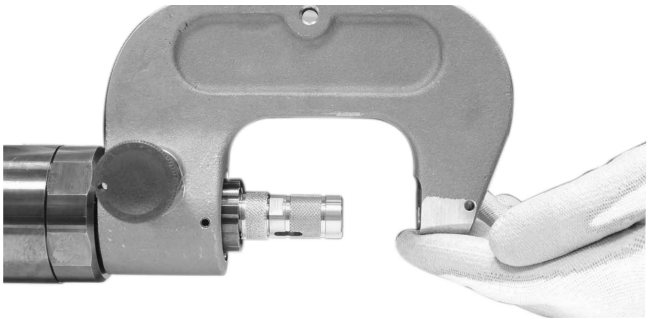

The riveting machine is now ready to use.

CONNECTOR ASSEMBLY

Screw the required connectors kit for the riveting procedure in the arm support. Before assembling, check that the die and the punch support are correctly in place (see page 3) and screwed.

Punch / mandrel support	Rivet matrix
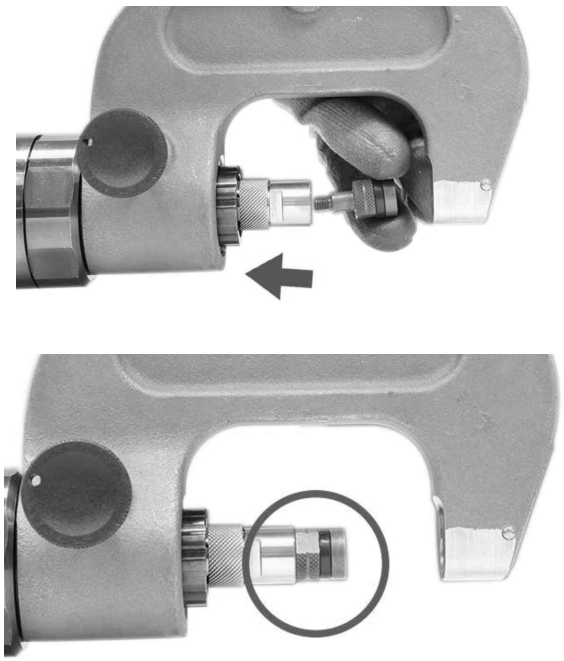	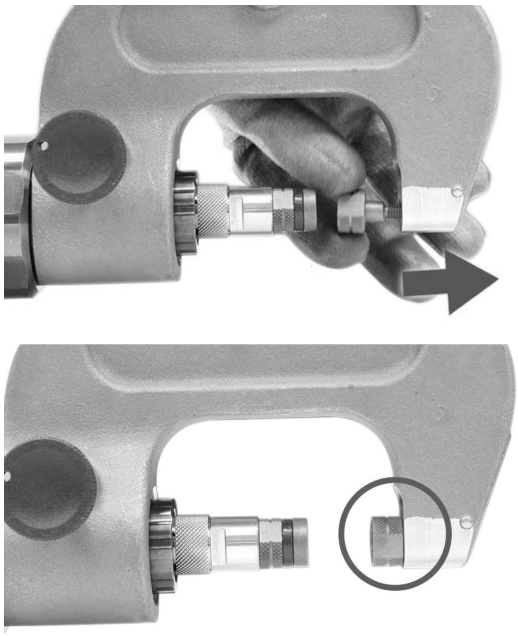

⚠ **As soon as the matrix and the punch support are in place, tighten with the spanner provided.** Check that the connection tips are in place after each riveting process. A release is dangerous and may damage the riveting machine.

SPEED AND PRESSURE CONTROL

The user can adjust manually the speed of the actuator as well as rivet installation pressure according to the type of material in order to avoid distortion.
See page 61 in order to adjust the pressure according to the material and matrix.

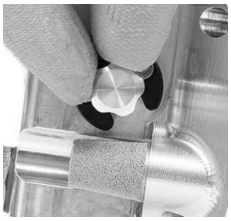
Speed

Pressure

RIVET BOX INCLUDED

The riveting machine is delivered with a box of 300 self-piercing rivets. These sample rivets are provided to allow a test of the machine. They are specific to car body repair.

INSTALLATION OF SELF-PIERCING RIVETS

Ø 3,3 mm

Ø 5,3 mm

During the installation of self-piercing rivets, make sure that the rivets are well-placed. The matrix must not be damaged as problems during the riveting process may occur.

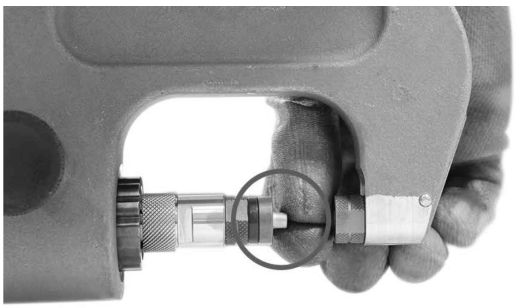

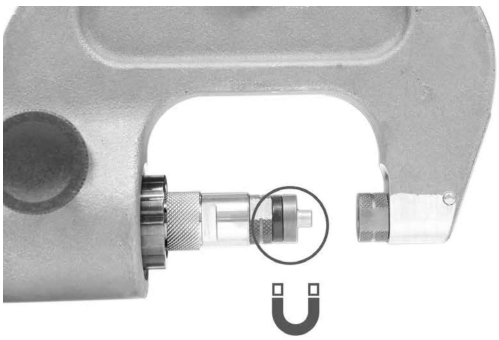

During each riveting process, make sure that the matrix - and the rivet itself - are layed out on the metal sheets to assemble. It is important to put the punch support in place in order to form a 90° angle.

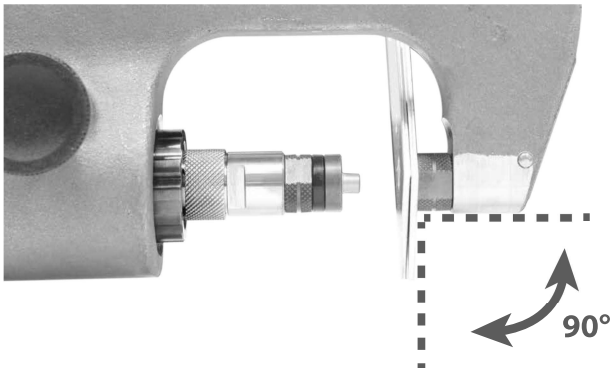

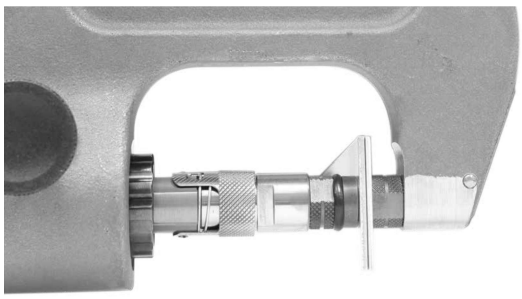

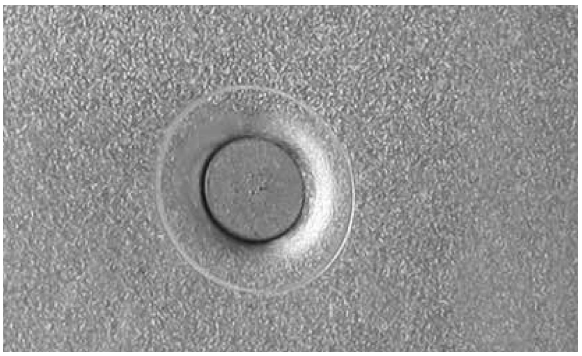

RESULT OF THE INSTALLATION OF SELF-PIERCING RIVET

STAMP AND CALIBRATE HOLES FOR FLOW-FORM RIVETS

To punch the sheet to a specific diameter, it is necessary to use a specific die. This die protects the sheet from damage.

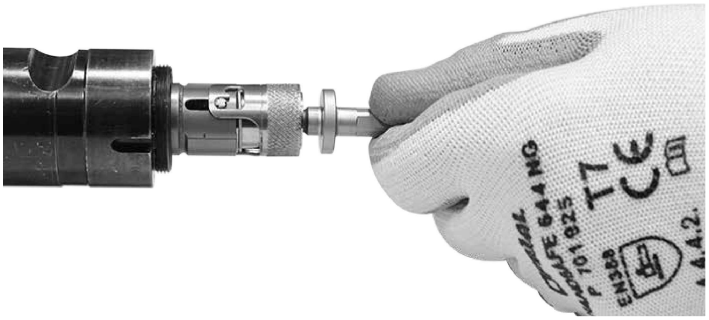

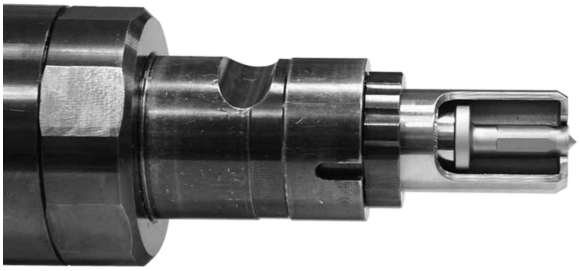

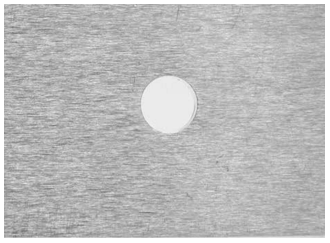

If using Flow-Form rivets, it is necessary to drill metal sheets before in order to put the rivet in place. The punch and the die above allow for a more precise punching as well as allowing the fitting of Flow-Form rivet.

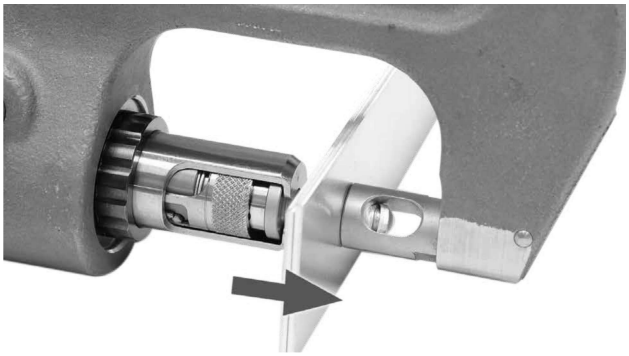

After punching the punch is pushed into the metal sheet and pierces the hole. The sheet is free from the punch and ready for riveting.

INSTALLATION OF FLOW FORM RIVETS

Before assembling metal sheets with Flow-Form rivets, it is necessary to pre-drill the metal (see the procedure above).

Once the starter hole is done, insert the Flow-Form rivet:

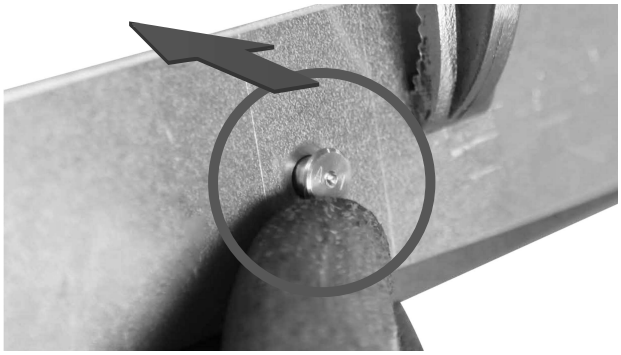

The end piece F1 must be on the head rivet side:

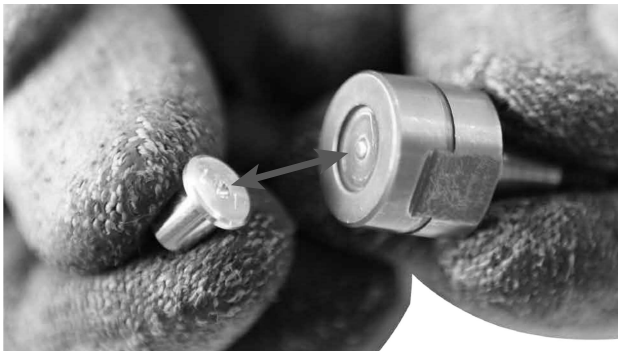

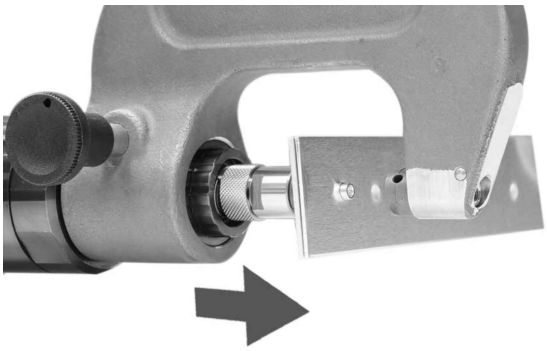

The F2 matrix has got an evacuation hole for glue residues. After each use, remove all the glue residues on the tools.

If the punch does not come out of the sheet metal, use the PULL function of the riveter.
Press the PULL button and squeeze the trigger.
Once the punch is out of the sheet metal, press the PUSH button.

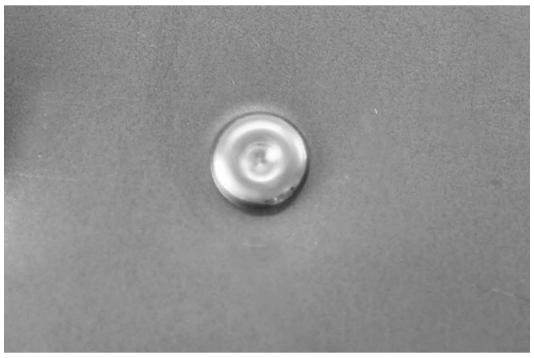

RESULT OF THE INSTALLATION OF A FLOW-FORM RIVET

RIVET EXTRACTION

For car body repairs, old or damaged rivets must be removed.
To avoid to have to take off the rivets by drilling, the extraction connection and the matrix must be used. Indeed, they enable to extract rivets while preserving metal sheets.

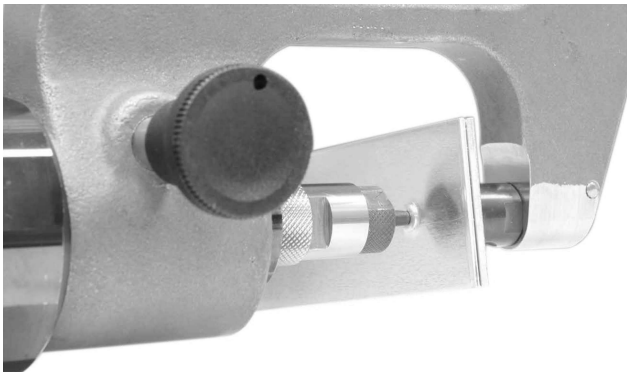

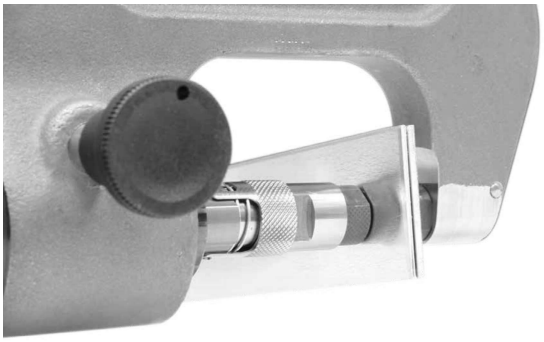

Before using the riveting machine and to facilitate the extraction of self-piercing rivets, it is possible to make a mark on the rivet with the center punch tool (ref : 048379) to locate the extraction tool in the mark.

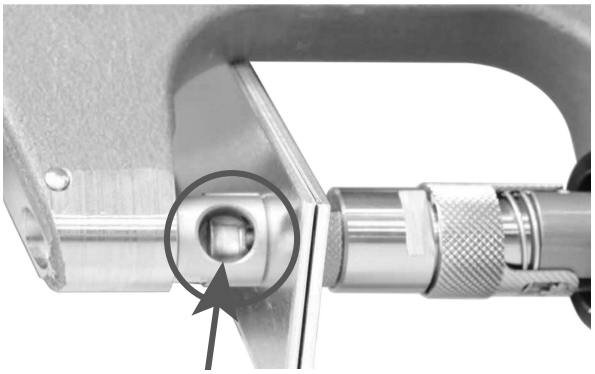

If during the extraction, the rivet stays in the die hole, remove ithe blank before making another extraction. Once the hole is punched, release the pressure immediately. Failing to do so may damage the tip.

CONTROLS AND MAINTENANCE

The GYSPRESS 10T PUSH PULL does not require any special maintenance. A simple periodic visual control is recommended in order to prevent any breakdown or failure during use.
Clean the GYSPRESS 10T PUSH PULL at least once a week in order to eliminate dust and dirt which could alter the function of the product in the long term. Use auto cleaning cloths. Do not use water nor flammable or corrosive liquids.

During maintenance, the compressed air supply must be disconnected.

TROUBLESHOOTING

The chart below indicates the issues that can be observed during the use of the product. If the problem observed does not appear in the table below, stop using the product and call immediately your distributor to seek support.

SYMPTOMS	POSSIBLE CAUSES	REMEDIES
The riveting machine does not work.	Air is not connected.	Connect the air pressure.
	Air pressure too low.	Check air pressure supply.
	The air pressure is not adjusted correctly.	Adjust air pressure between 2 and 8 bar.
	The potentiometer is set at the minimum speed.	Adjust the speed laying.
The rivet is not in place.	Mandrel or matrix faulty	Replace the mandrel or the matrix.
	Presence of glue on the mandrel or inside the matrix.	Clean the glue
	The pressure is not enough.	Air pressure is too low or not well-ajdusted.
	Rivet length incorrect.	Follow manufacturer instructions.
Air, leak.	Faulty pipe.	Change the pipe.
	Faulty coupling.	Change the coupling.
	Faulty seals.	Repair by the manufacturer.

TABLEAU RÉGLAGE PRESSION / PRESSURE CONTROL CHART / TABELLE EINSTELLUNG PRESSDRUCK / TABLA DE AJUSTE DE PRESIÓN / ТАБЛИЦА РЕГУЛИРОВКИ ДАВЛЕНИЯ / TABEL INSTELLING AANDRUKKRACHT / 圧力制御チャート / **TABELLA REGOLAZIONE PRESSIONE**

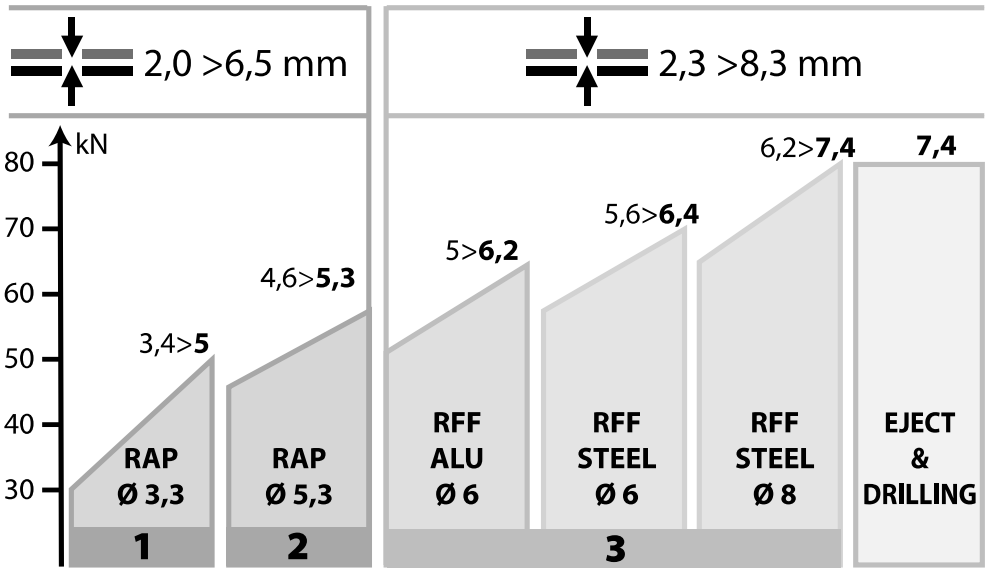

RAP		E&D	RFF		
A1 Ø 3 mm	B1 Ø 5 mm	E1	ST1 Ø 6 mm	T5 Ø 6 mm	F1
		E1 (x5) : 054288	T7 : 058071	T7 : 058019	
1	2	1 / 2 / 3	3		
A2 Ø 3 mm	B2 Ø 5 mm	E2	T7 Ø 6 mm		F2
A1+A2 : 054295	B1+B2 : 054301	E1+E2 : 054318	ST1 : 058033		F1+F2 : 054714

RAP

- Rivets Auto-Perçants
- Self-piercing rivets (SPR)
- Stanznieten
- Remaches autoperforantes
- Самопроникающие заклепки
- Zelf perforerende ponsnagels
- セルフピアシングリベット
- Rivetti auto-perforanti

RFF

- Rivets Flow-Form
- Flow-Form rivets (FFR)
- Fließformniete
- Remaches Flow-Form
- Заклепки обтекающей формы Flow-Form
- Flowform ponsnagels
- フローフォームリベット
- Rivetti Flow-Form

AIR PRESSURE :

2 bar = 1.2 t = 12 kN
4 bar = 3.7 t = 37 kN
6 bar = 6.2 t = 62 kN
7 bar = 7.4 t = 74 kN
8 bar = 8.3 t = 83 kN

AIR MAX :

8 bar = 116 psi

AIR UNIT :

1 bar = 14.5 psi

ICÔNES / SYMBOLS / ZEICHENERKLÄRUNG / SÍMBOLOS / SYMBOLEN / アイコン

	- Attention ! Risque d'écrasement des mains. - Warning ! Danger of crushing hands. - Achtung! Handverletzungen möglich. - ¡ATENCIÓN! Riesgo de aplastamiento de manos.	- Внимание! Опасность прищемить руку. - Waarschuwing ! Gevaar van beknelling van handen. 警告！手を挟まれないよう注意 - Attenzione! Rischio di schiacciamento delle mani.
	- Attention ! Risque d'écrasement des doigts. - Warning ! Danger of crushing fingers. - Achtung! Quetschgefahr. - ¡ATENCIÓN! Riesgo de aplastamiento de dedos.	- Внимание! Опасность прищемить пальцы. - Waarschuwing ! Gevaar van beknelling van vingers. 警告！指を挟まれないよう注意 - Attenzione! Rischio di schiacciamento delle dita.
	- Respecter les consignes générales. - Respect general rules. - Allgemeine Hinweise beachten. - Sigas las indicaciones generales.	- Соблюдайте общие указания. - Respecteer algemene veiligheidsregels. 一般的な規則尊厳 - Rispettare le istruzioni generali.
	- Porter des gants. - Wear gloves. - Handschutz benutzen. - Lleve guantes.	- Носите перчатки. - Draag beschermende werkhandschoenen. 手袋着用 - Indossare dei guanti.
	- Porter un masque facial. - Wear a face mask. - Gesichtsschutz benutzen. - Lleve una máscara protectora.	- Носите лицевую защитную маску. - Draag een veiligheidsmasker. フェイスマスク着用 - Indossare una maschera facciale.
	- Respecter le mode d'emploi. - Follow the user manual. - Betriebsanleitung beachten. - Siga el manual de instrucciones.	- Соблюдайте инструкцию по эксплуатации. - Lees en volg de gebruiksaanwijzing op. 取り扱い説明書の記述に従ってください。 - Rispettare le modalità di utilizzo.
CE	- Appareil conforme aux directives européennes. La déclaration de conformité est disponible sur notre site internet. – The device complies with European Directive. The certificate of compliance is available on our website. - Gerät entspricht europäischen Richtlinien. Die Konformitätserklärung finden Sie auf unsere Webseite. - El aparato está conforme a las normas europeas. La declaración de conformidad está disponible en nuestra página Web.	- Устройство соответствует европейским нормам. Декларация соответствия есть на нашем сайте. - Het toestel is in overeenstemming met de Europese richtlijnen. De conformiteitsverklaring is te vinden op onze internetsite. - 本機は欧州指令に準拠しています。当社のウェブサイトからEU適合宣言書を参照することが出来ます。 - Dispositivo in conformità con le norme europee. La dichiarazione di conformità è disponibile sul nostro sito internet.
	- Produit dont le fabricant participe à la valorisation des emballages en cotisant à un système global de tri, collecte sélective et recyclage des déchets d'emballages ménagers. - Product whose manufacturer is involved in the packaging's recycling process by contributing to a global system of sorting, collecting and recycling of households' packaging waste. - Für die Entsorgung Ihres Gerätes gelten besondere Bestimmungen (Sondermüll). - Producto sobre el cual el fabricante participa mediante una valorización de los embalajes cotizando a un sistema global de separación, recogida selectiva y reciclado de los deshechos de embalajes domésticos.	- Устройство соответствует директивам Евросоюза. Декларация о соответствии доступна для просмотра на нашем сайте (ссылка на обложке). - メーカーは、グローバルリサイクルシステムに貢献することにより、パッケージングのリサイクルに貢献しています。 - Product waarvan de fabrikant deelneemt aan de terugwinning van verpakkingen door bij te dragen aan een wereldwijd systeem van sortering, selectieve inzameling en recycling van huishoudelijk verpakkingsafval. - Prodotto il cui produttore partecipa al recupero degli imballaggi contribuendo ad un sistema globale di selezione, raccolta differenziata e riciclaggio dei rifiuti di imballaggi domestici.
	- Produit recyclable qui relève d'une consigne de tri. - Recyclable product that falls within waste sorting recommendations. - Recyclebares Gerät, das spezifisch entsorgt werden muss (nach dem Dekret N°2014-1577). - Producto reciclable que requiere una separación determinada según el decreto nº 2014-1577.	- Этот аппарат подлежит утилизации. - この製品は適切にリサイクルされることが好ましいです。 - Rekupereerbaar product dat onderworpen is aan een sorteerinstructie. - Prodotto riciclabile che è soggetto ad un'istruzione di smistamento.

CONDITIONS DE GARANTIE FRANCE

La garantie couvre tous défauts ou vices de fabrication pendant 2 ans, à compter de la date d'achat (pièces et main d'oeuvre).

La garantie ne couvre pas :
- Toutes autres avaries dues au transport.
- L'usure normale des pièces (Ex. : câbles, pinces, etc.).
- Les incidents dus à un mauvais usage (erreur d'alimentation, chute, démontage).
- Les pannes liées à l'environnement (pollution, rouille, poussière).

En cas de panne, retourner l'appareil à votre distributeur, en y joignant :
- un justificatif d'achat daté (ticket de sortie de caisse, facture….)
- une note explicative de la panne.

WARRANTY

The warranty covers faulty workmanship for 2 years from the date of purchase (parts and labour).

The warranty does not cover:
• Transit damage.
• Normal wear of parts (eg. : cables, clamps, etc..).
• Damages due to misuse (power supply error, dropping of equipment, disassembling).
• Environment related failures (pollution, rust, dust).

In case of failure, return the unit to your distributor together with:
- The proof of purchase (receipt etc ...)
- A description of the fault reported

HERSTELLERGARANTIE

Die Garantieleistung des Herstellers erfolgt ausschließlich bei Fabrikations- oder Materialfehlern, die binnen 24 Monate nach Kauf angezeigt werden (nachweis Kaufbeleg). Nach Anerkenntnis des Garantieanspruchs durch den Hersteller bzw. seines Beauftragten erfolgen eine für den Käufer kostenlose Reparatur und ein kostenloser Ersatz von Ersatzteilen. Die Garantiezeitraum bleibt aufgr- und erfolgter Garantieleistungen unverändert.
Ausschluss:
Die Garantieleistung erfolgt nicht bei Defekten, die durch unsachgemäßen Gebruach, Sturz oder harte Stöße sowie durch nicht autorisierte Reparaturen oder durch Transportschäden, die infolge des Einsendens zur Reparatur, hervorgerufen worden sind. Keine Garantie wird für Verschleißteile (z. B. Kabel, Klemmen, Vorsatzscheiben usw.) sowie bei Gebruachsspuren übernommen.

Das betreffende Gerät bitte immer mit Kaufbeleg und kurzer Fehlerbeschreibung ausschließlich über den Fachhandel einschicken. Die Reparatur erfolgt erst nach Erhalt einer schriftlichen Akzeptanz (unterschrift) des zuvor Kostenvoranschlags durch den Besteller. Im Fall einer Garantieleistung trägt der Hersteller ausschließlich die Kosten für den Rückversand an den Fachhändler.

GARANTÍA

La garantía cubre todos los defectos o vicios de fabricación durante 2 años, a partir de la fecha de compra (piezas y mano de obra)

La garantía no cubre:
• Todas las otras averías resultando del transporte
• El desgaste normal de las piezas (cables, pinzas…)
• Los incidentes resultando de un mal uso (error de alimentación, caída, desmontaje)
• Los fallos relacionados con el entorno (polución, oxidación, polvo…)

En caso de fallo, regresen la maquina a su distribuidor, adjuntando:
• Un justificativo de compra con fecha (recibo, factura…)
• Una nota explicativa del fallo

GARANTIE

De garantie dekt alle gebreken en fabricagefouten gedurende twee jaar vanaf de aankoopdatum (onderdelen en arbeidsloon).

De garantie dekt niet :
• Alle overige schade als gevolg van vervoer.
• De gebruikelijke slijtage van onderdelen (Bijvoorbeeld : kabels, klemmen, enz.).
• Incidenten als gevolg van verkeerd gebruik (verkeerde elektrische voeding, vallen, ontmanteling).
• Gebreken ten gevolge van de gebruiksomgeving (vervuiling, roest, stof).

In geval van storing moet het apparaat teruggestuurd worden naar uw distributeur, samen met:
- Een gedateerd aankoopbewijs (betaalbewijs, factuur ...).
- Een beschrijving van de storing.

保証

保証は、購入日から2年間、すべての欠陥または製造上の欠陥を対象とします。
（部品と労働力）。

保証は以下をカバーしません：
•輸送によるその他の損傷。
•部品（ケーブル、クリップなど）の通常の摩耗。
•誤用（誤送、落下、分解）によるインシデント。
•環境破壊（汚染、錆、ほこり）。

故障した場合は、以下を同封してデバイスをディストリビューターに返送してください。
-日付付きの購入証明（領収書の領収書、請求書....）
-内訳の説明。

ГАРАНТИЯ

Гарантия распространяется на любой заводской дефект или брак в течение 2х лет с даты покупки изделия (запчасти и рабочая сила).

Гарантия не распространяется на:
• Любые поломки, вызванные транспортировкой.
• Нормальный износ деталей (Например : кабели, зажимы и т.д.).
• Случаи неправильного использования (ошибка питания, падение, разборка).
• Случаи выхода из строя из-за окружающей среды (загрязнение воздуха, коррозия, пыль).

При выходе из строя, обратитесь в пункт покупки аппарата с предъявлением следующих документов:
- документ, подтверждающий покупку (с датой): кассовый чек, инвойс....
- описание поломки.

GARANZIA

La garanzia copre qualsiasi difetto di fabbricazione per 2 anni, a partire dalla data d’acquisto (pezzi e mano d’opera).

La garanzia non copre:
• Danni dovuti al trasporto.
• La normale usura dei pezzi (Es. : cavi, morsetti, ecc.).
• Gli incidenti causati da uso improprio (errore di alimentazione, cadute, smontaggio).
• I guasti legati all’ambiente (inquinamento, ruggine, polvere).

In caso di guasto, rinviare il dispositivo al distributore, allegando:
- la prova d’acquisto con data (scontrino, fattura...)
- una nota esplicativa del guasto.

SAS GYS
1, rue de la Croix des Landes
CS 54159
53941 SAINT-BERTHEVIN
Cedex France