Split type room air conditioner
Wall-mounted type

FUJITSU

SERVICE MANUAL

Indoor unit	Outdoor unit
ASYG09KMCB	AOYG09KMCBN
ASYG12KMCB	AOYG12KMCBN
ASYG14KMCB	AOYG14KMCBN

Refrigerant R32

CONTENTS

SPECIFICATIONS 1
DIMENSIONS 3
REFRIGERANT SYSTEM DIAGRAM 6
PCB CIRCUIT DIAGRAM 7
ERROR DETECTION 9
PARTS (INDOOR UNIT) 10
PARTS (OUTDOOR UNIT) 15
ACCESSORIES 19

FUJITSU GENERAL LIMITED

SPECIFICATIONS

Type					Wall mounted		
					Inverter heat pump		
Model name					**ASYG09KMCB**	**ASYG12KMCB**	**ASYG14KMCB**
Power supply					230 V ~ 50 Hz		
Power supply intake					Outdoor unit		
Available voltage range					198—264 V		
Capacity		Cooling	Rated	kW	2.50	3.40	4.20
				Btu/h	8,500	11,600	14,300
			Min.—Max.	kW	1.00—3.20	1.00—4.15	1.10—4.80
				Btu/h	3,400—10,900	3,400—14,100	3,700—16,300
		Heating	Rated	kW	3.20	4.00	5.40
				Btu/h	10,900	13,600	18,400
			Min.—Max.	kW	0.90—5.20	0.90—5.70	1.10—6.00
				Btu/h	3,100—17,700	3,100—19,400	3,700—20,400
Input power		Cooling	Rated	kW	0.630	0.925	1.205
			Min.—Max.		0.21—0.85	0.21—1.33	0.21—1.61
		Heating	Rated		0.730	0.990	1.560
			Min.—Max.		0.18—1.80	0.18—1.80	0.17—1.85
		Fan		W	30		32
Current		Cooling	Rated	A	3.2	4.4	5.6
		Heating			3.7	4.7	7.1
EER		Cooling		kW/kW	3.97	3.68	3.49
COP		Heating			4.38	4.04	3.46
Sensible capacity		Cooling		kW	1.60	2.20	2.80
Power factor		Cooling		%	87	91	93
		Heating			89	92	95
Moisture removal				L/h (pints/h)	1.3 (2.3)	1.8 (3.2)	2.1 (3.7)
Maximum operating current *1		Cooling		A	6.0	7.0	9.0
		Heating			9.5	11.0	11.5
Fan	Airflow rate	Cooling	HIGH	l/s (m^3/h)	208 (750)	208 (750)	214 (770)
			MED		178 (640)	178 (640)	189 (680)
			LOW		133 (480)	133 (480)	147 (530)
			QUIET		86 (310)	86 (310)	100 (360)
		Heating	HIGH		208 (750)	208 (750)	214 (770)
			MED		178 (640)	178 (640)	189 (680)
			LOW		144 (520)	144 (520)	156 (560)
			QUIET		92 (330)	92 (330)	106 (380)
	Type × Q'ty				Cross flow fan × 1		
	Motor output			W	35		
Sound pressure level *2		Cooling	HIGH	dB (A)	43	43	44
			MED		40	40	40
			LOW		32	32	33
			QUIET		21	21	25
		Heating	HIGH		43	43	44
			MED		38	38	40
			LOW		33	33	35
			QUIET		22	22	27
Heat exchanger type		Dimensions (H × W × D)		mm	Main: 320 × 630 × 20 Sub: 84 × 630 × 13.3		
		Fin pitch			Main: 1.1, Sub: 1.4		
		Rows × Stages			Main: 2 × 20, Sub: 1 × 4		
		Pipe type			Copper		
		Fin type			Aluminum		
Enclosure		Material			Polystyrene		
		Color			White Approximate color of Munsell N 9.25/		
Dimensions (H × W × D)		Net		mm	268 × 840 × 203		
		Gross			270 × 884 × 336		
Weight		Net		kg	8.5		
		Gross			10.5		
Connection pipe		Size	Liquid	mm (in)	Ø 6.35 (Ø 1/4)		
			Gas		Ø 9.52 (Ø 3/8)		
		Method			Flare		
Drain hose		Material			PP + HDPE		
		Size		mm	Ø 13.8 (I.D.), Ø 15.8 to Ø 16.7 (O.D.)		
Operation range		Cooling		°C	18 to 32		
				%RH	80 or less		
		Heating		°C	16 to 30		
Remote control					Wireless remote controller (Option: Wired remote controller, Mobile app*3 [FGLair™])		
International Protection rating					IPX0		

NOTES:

- Specifications are based on the following conditions:
  - Cooling: Indoor temperature of 27 °CDB/19 °CWB, and outdoor temperature of 35 °CDB/24 °CWB.
  - Heating: Indoor temperature of 20 °CDB/15 °CWB, and outdoor temperature of 7 °CDB/6 °CWB.
  - Pipe length: 5 m, Height difference: 0 m. (Between outdoor unit and indoor unit.)
- Protective function might work when using it outside the operation range.
- *1: Maximum operating current is the total current of the indoor unit and the outdoor unit.
- *2: Sound pressure level:
  - Measured values in manufacturer's anechoic chamber.
  - Because of the surrounding sound environment, the sound levels measured in actual installation conditions might be higher than the specified values here.
- *3: Available on Google Play™ store or on App Store®. Optional WLAN adapter is also required. For details, refer to the setting manual.

Type				Inverter heat pump		
Model name				**AOYG09KMCBN**	**AOYG12KMCBN**	**AOYG14KMCBN**
Power supply				230 V ~ 50 Hz		
Power supply intake				Outdoor unit		
Available voltage range				198—264 V		
Starting current			A	3.7	4.7	7.1
Fan	Airflow rate	Cooling	m^3/h	2,020	2,020	2,020
		Heating		1,440	1,620	1,620
	Type × Q'ty			Propeller fan × 1		
	Motor output		W	49		
Sound pressure level *		Cooling	dB (A)	48	49	49
		Heating		43	47	47
Sound power level		Cooling	dB (A)	63	65	65
		Heating		59	63	63
Heat exchanger type		Dimensions (H × W × D)	mm	588 × 881 × 18.2 588 × 851 × 18.2		
		Fin pitch		1.3		
		Rows × Stages		1 × 28		
		Pipe type		Copper		
		Fin type	Type (Material)	Corrugate (Aluminum)		
			Surface treat-ment	PC fin		
Compressor	Type × Q'ty			DC rotary × 1		
	Motor output		W	900		
Refrigerant		Type (Global warming potential)		R32 (675)		
		Charge	g	850		
Refrigerant oil		Type		FW68S		
		Amount	cm^3	350		
Enclosure		Material		Steel sheet		
		Color		Beige Approximate color of Munsell 10YR 7.5/1.0		
Dimensions (H × W × D)	Net		mm	620 × 790 × 290		
	Gross			713 × 945 × 395		
Weight	Net		kg	35		
	Gross			40		
Connection pipe	Size	Liquid	mm (in)	Ø 6.35 (Ø 1/4)		
		Gas		Ø 9.52 (Ø 3/8)		
	Method			Flare		
	Pre-charge length		m	15		
	Max. length			20		
	Max. height difference			15		
Operation range		Cooling	°C	10 to 43		
		Heating		-25 to 24		

NOTES:

- Specifications are based on the following conditions:
  - Cooling: Indoor temperature of 27 °CDB/ 19 °CWB, and outdoor temperature of 35 °CDB/ 24 °CWB.
  - Heating: Indoor temperature of 20 °CDB/ 15 °CWB, and outdoor temperature of 7 °CDB/ 6 °CWB.
  - Pipe length: 5 m, Height difference: 0 m.
- Protective function might work when using it outside the operation range.
- *: Sound pressure level
  - Measured values in manufacturer's anechoic chamber.
  - Because of the surrounding sound environment, the sound levels measured in actual installation conditions might be higher than the specified values here.

DIMENSIONS

INDOOR UNIT
ASYG09KMCB
ASYG12KMCB
ASYG14KMCB

Unit: mm

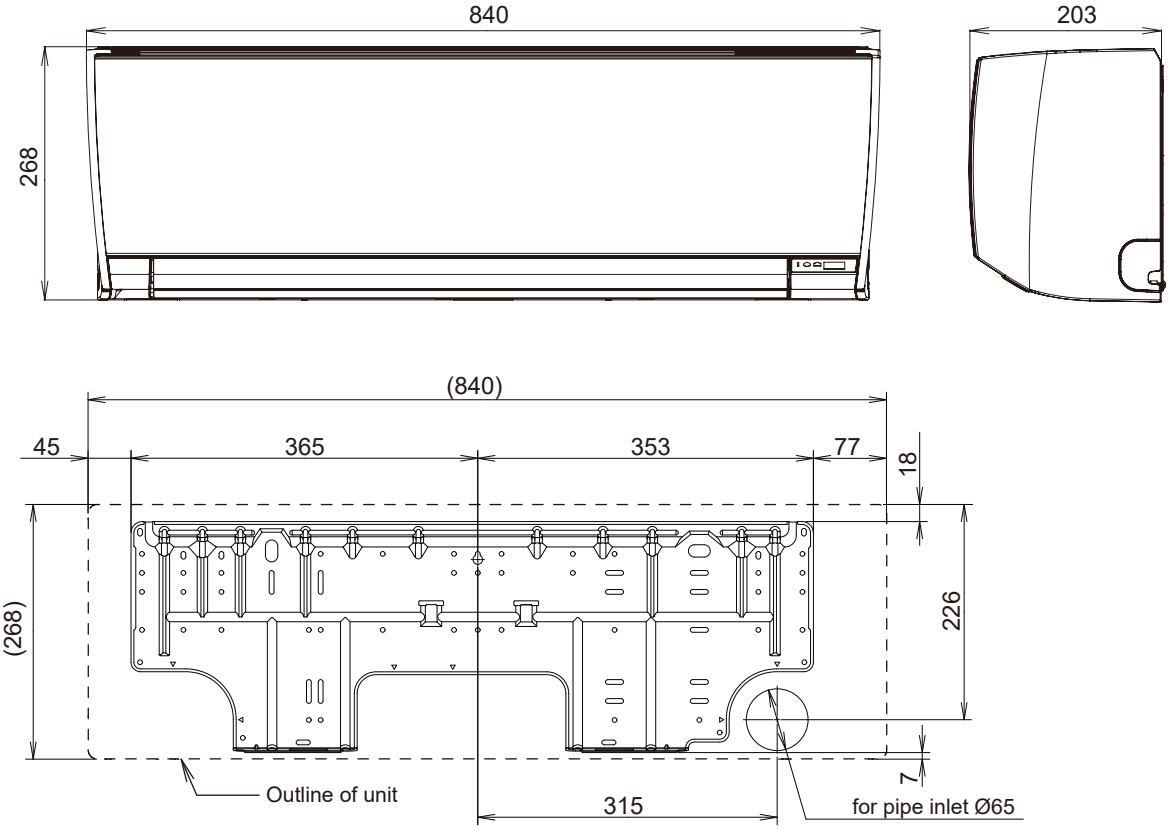

■ Installation space requirement

Provide sufficient installation space for product safety.

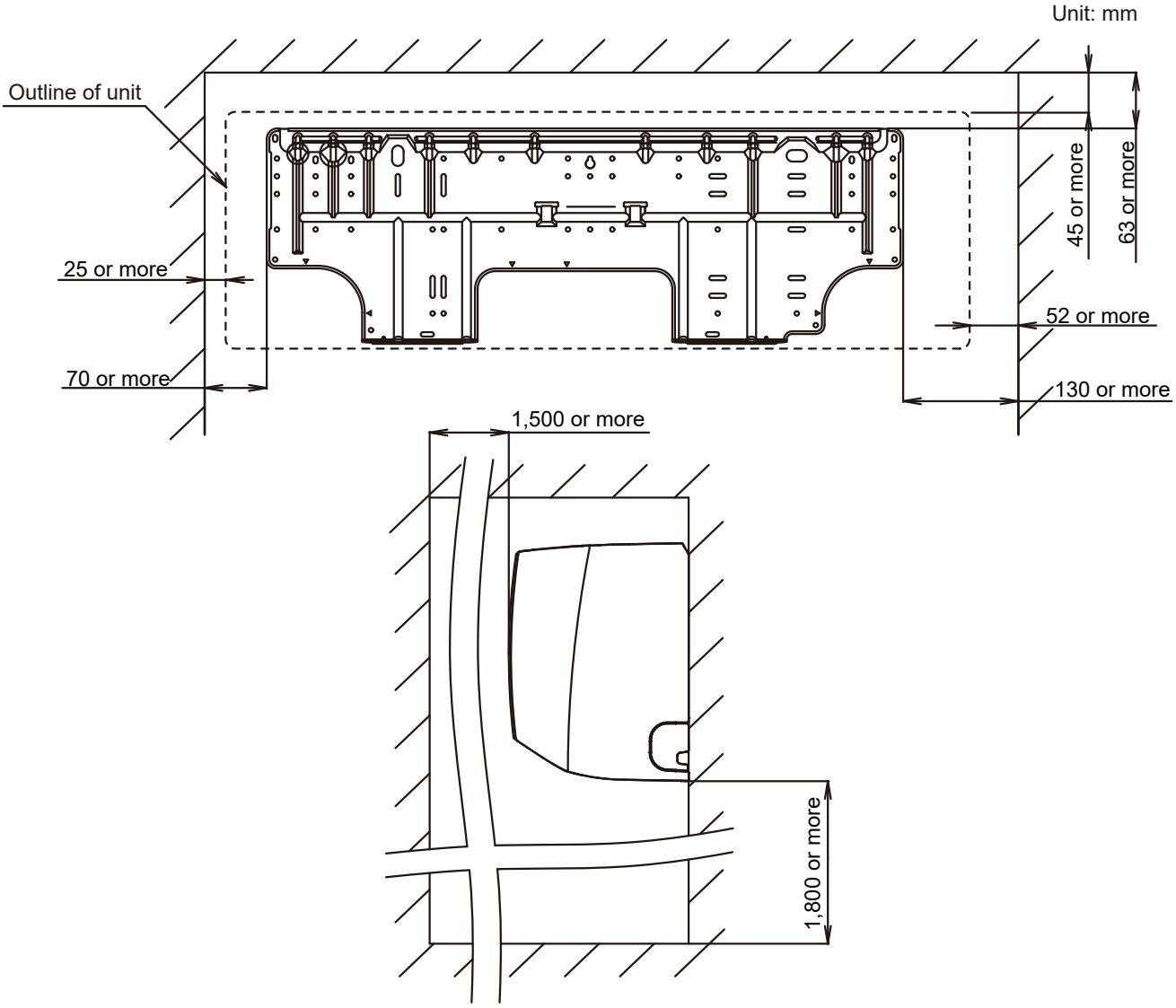

OUTDOOR UNIT
AOYG09KMCBN
AOYG12KMCBN
AOYG14KMCBN

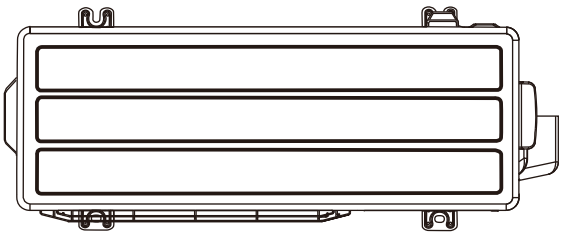

Top view

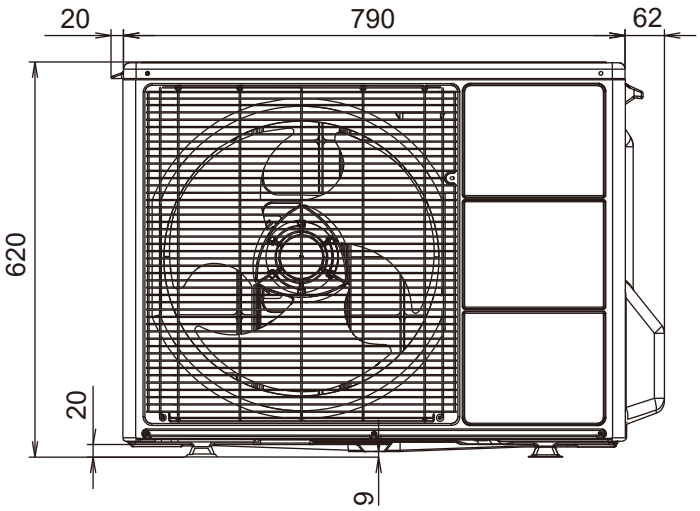

Front view

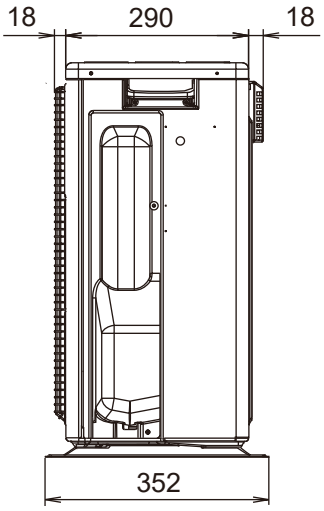

Side view

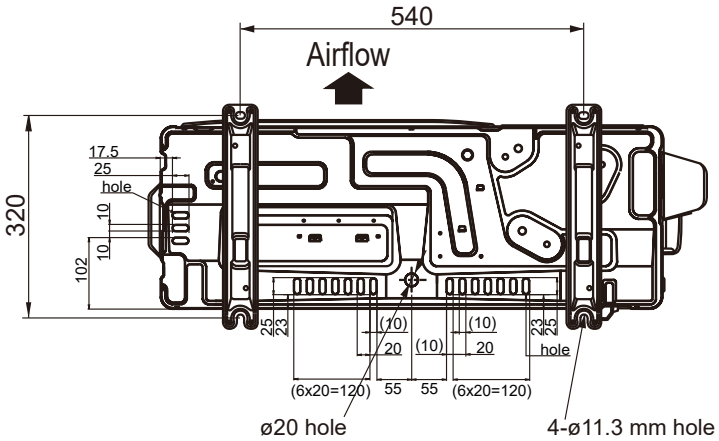

Bottom view

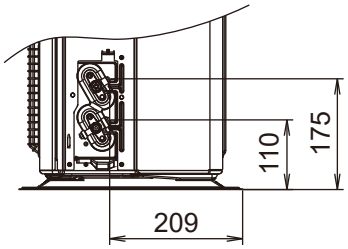

REFRIGERANT SYSTEM DIAGRAM

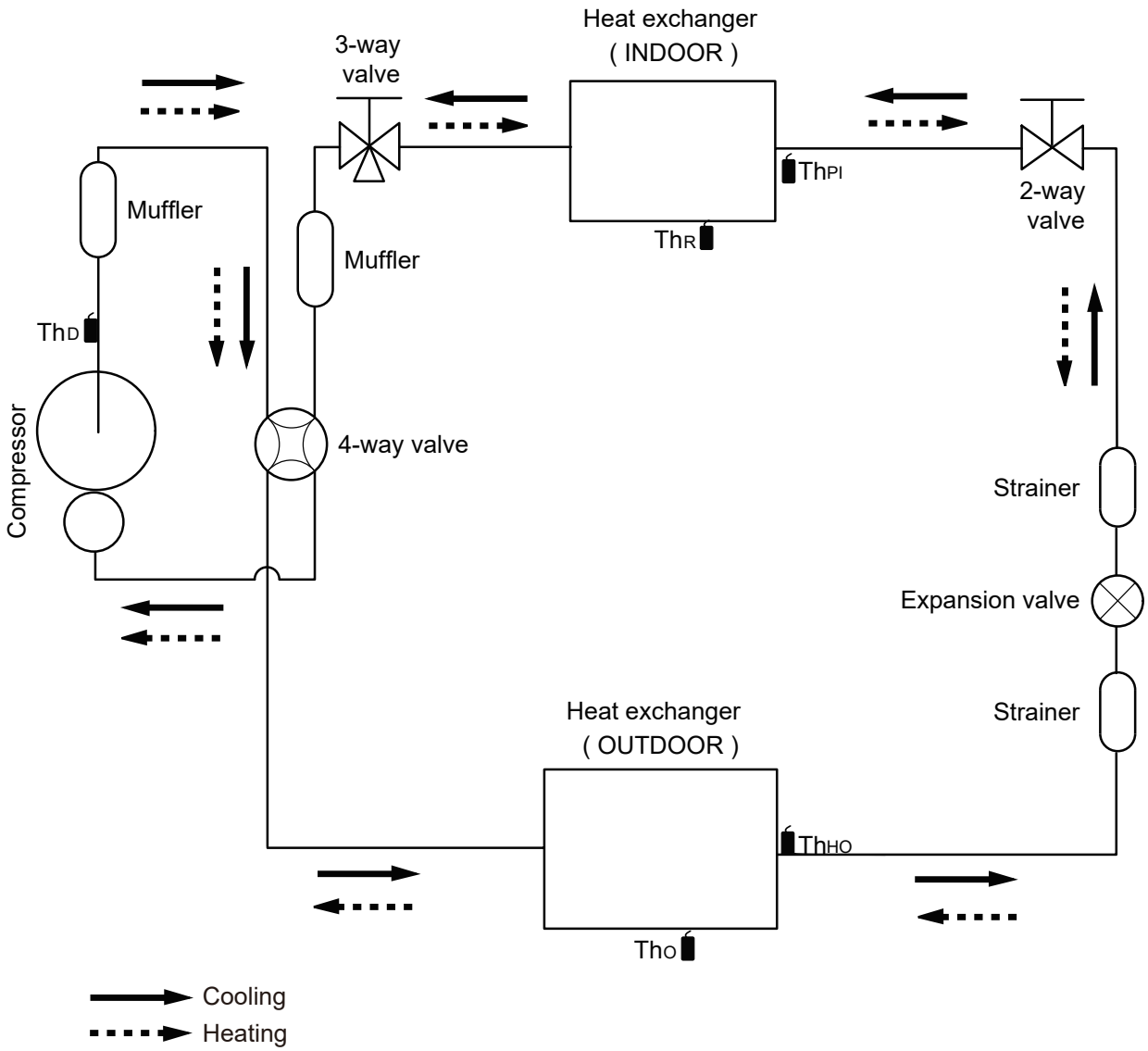

ThD :Thermistor (Discharge temp.)

ThO :Thermistor (Outdoor temp.)

ThHO :Thermistor (Heat exchanger out temp.)

ThR :Thermistor (Room temp.)

ThPI :Thermistor (Pipe temp.)

PCB CIRCUIT DIAGRAM

INDOOR UNIT

Models : ASYG09KMCB
ASYG12KMCB
ASYG14KMCB

CONTROL UNIT
ASYG09KMCB : EZ-0180EHSE
ASYG12KMCB : EZ-0180FHSE
ASYG14KMCB : EZ-0180GHSE

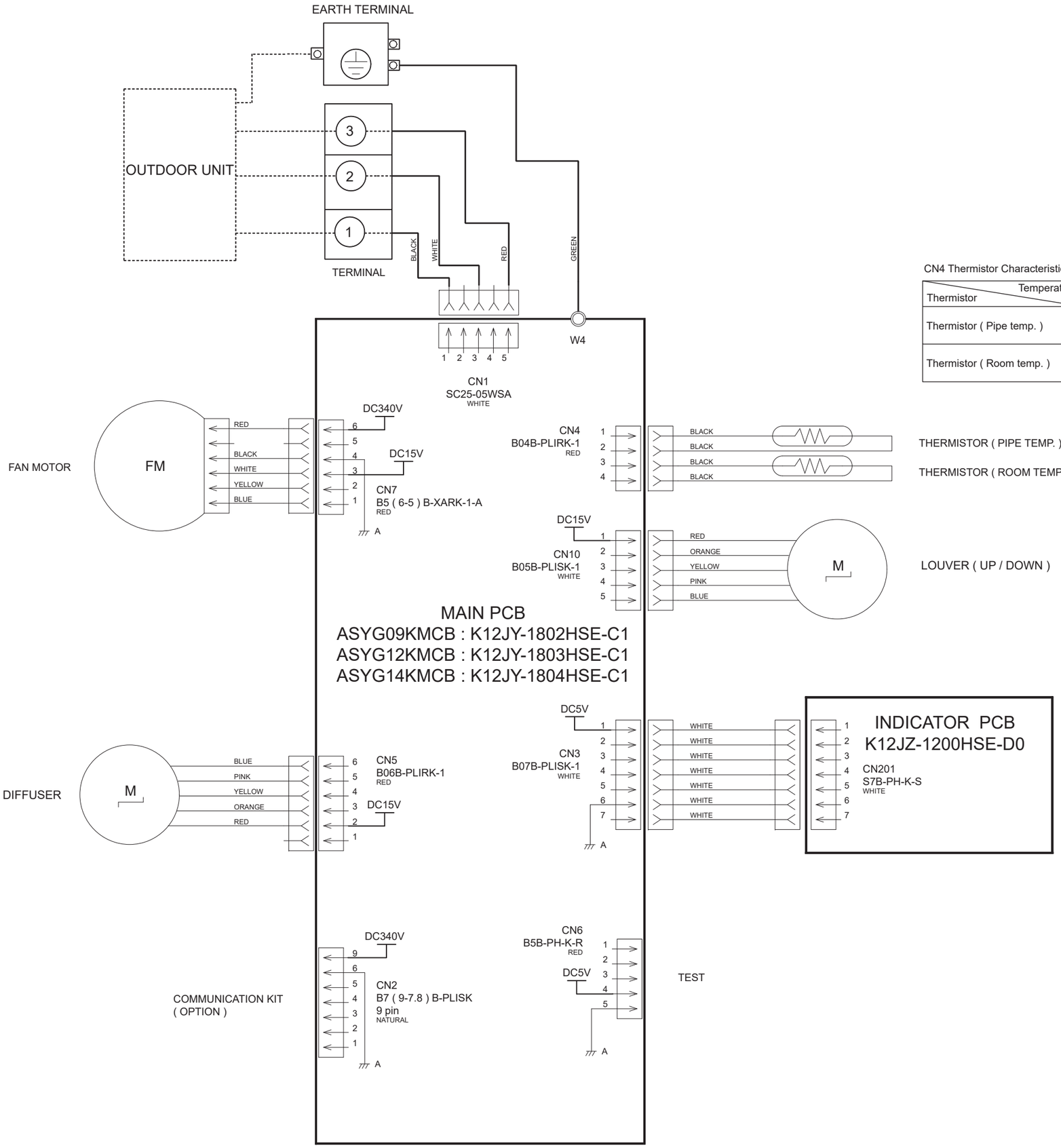

CN7 DC Fan motor

Pin No.	Terminal code	Function of terminal	Lead wire color
6	Vm	Motor power voltage input	Red
5	——	——	——
4	GND	GND	Black
3	Vcc	Control power voltage input	White
2	Vsp	Speed control voltage input	Yellow
1	PG	Revolution pulse output	Blue

CN4 Thermistor Characteristics.

Thermistor \ Temperature	(0℃)	(20℃)	(30℃)
Thermistor (Pipe temp.)	176.0 k Ω 1.1 V	62.9 k Ω 2.2 V	39.6 k Ω 2.8 V
Thermistor (Room temp.)	33.6 k Ω 1.1 V	12.5 k Ω 2.2 V	8.0 k Ω 2.8 V

OUTDOOR UNIT

Models : AOYG09KMCBN
AOYG12KMCBN
AOYG14KMCBN

INVERTER ASSEMBLY
AOYG09KMCBN : EZ-018LHUE
AOYG12KMCBN : EZ-018MHUE
AOYG14KMCBN : EZ-018PHUE

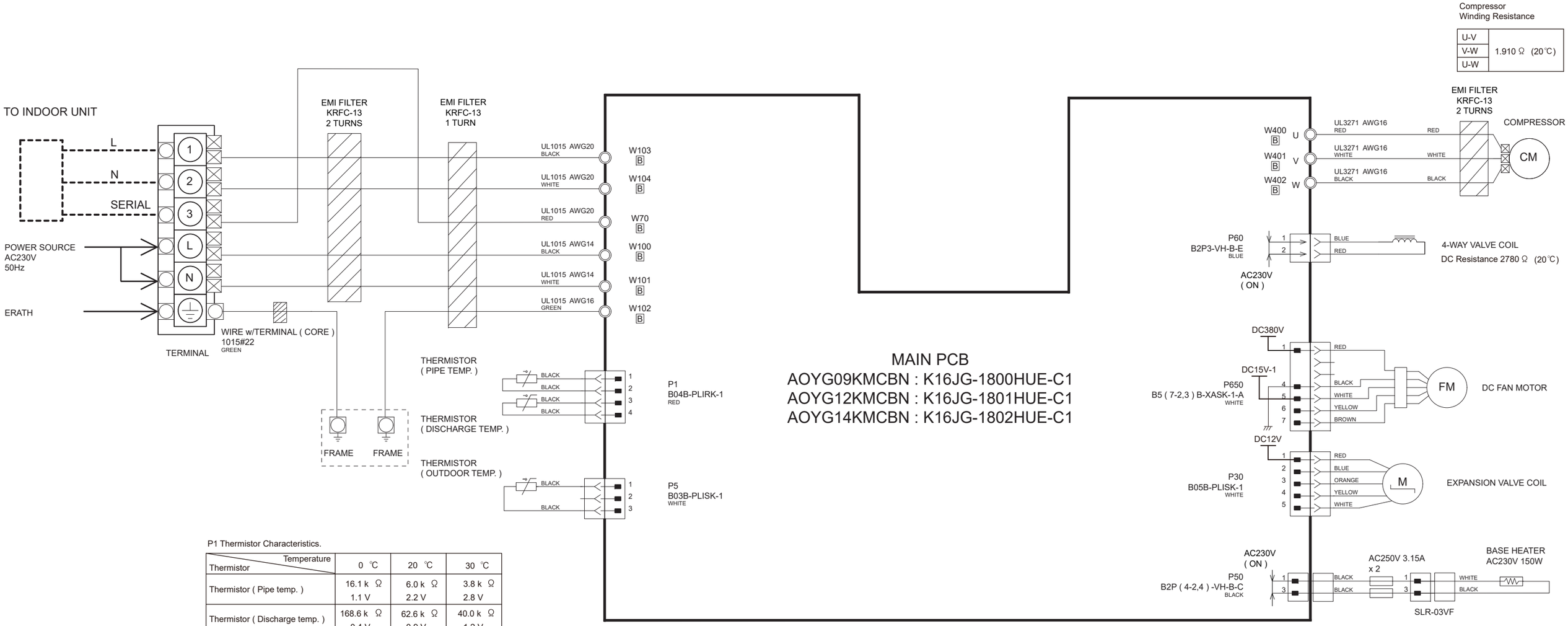

P1 Thermistor Characteristics.

Thermistor \ Temperature	0 ℃	20 ℃	30 ℃
Thermistor (Pipe temp.)	16.1 k Ω 1.1 V	6.0 k Ω 2.2 V	3.8 k Ω 2.8 V
Thermistor (Discharge temp.)	168.6 k Ω 0.4 V	62.6 k Ω 0.9 V	40.0 k Ω 1.2 V

P5 Thermistor Characteristics.

Thermistor \ Temperature	0 ℃	20 ℃	30 ℃
Thermistor (Outdoor temp.)	35.2 k Ω 2.6 V	12.6 k Ω 3.8 V	8.0 k Ω 4.1 V

P650 DC Fan Motor

Pin No.	Terminal code	Function of terminal	Lead wire color
1	Vm	Motor power voltage input	Red
2	——	——	——
3	——	——	——
4	GND	GND	Black
5	Vcc	Control power voltage input	White
6	Vsp	Speed control voltage input	Yellow
7	FG	Revolution pulse output	Brown

P30 Expansion Valve Coil
Recommended Drive Condition
Unipolar Drive, 1-2 Phase Excitation.

1(Red) - 3(Blue)	Coil resistance ≒46.0Ω (20℃)
1(Red) - 4(Orange)	
1(Red) - 5(Yellow)	
1(Red) - 6(White)	

ERROR DETECTION

If you use a wireless remote controller, the lamp on the photo detector unit will output error codes by way of blinking patterns. If you use a wired remote controller, error codes will appear on the remote control display. See the lamp blinking patterns and error codes in the table. An error display is displayed only during operation.

Troubleshooting with indoor unit display

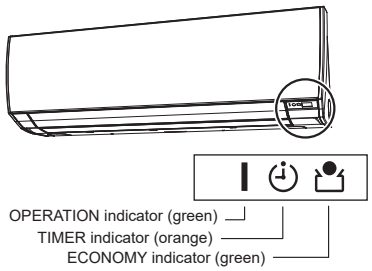

Troubleshooting with wired remote controller display (option)

If an error occurs, the following display will be shown. ("Er" will appear in the set room temperature display.)

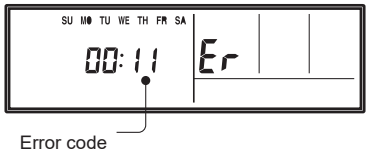

Error display			Wired remote controller Error code	Description
OPERATION lamp (green)	TIMER lamp (orange)	ECONOMY lamp (green)		
●(1)	●(1)	◆	11	Serial communication error
●(1)	●(2)	◆	12	Wired remote controller communication error
●(1)	●(5)	◆	15	Check run unfinished
●(1)	●(6)	◆	16	Peripheral unit transmission PCB connection error
●(1)	●(8)	◆	18	External communication error
●(2)	●(1)	◆	21	Unit number or Refrigerant circuit address setting error [Simultaneous Multi]
●(2)	●(2)	◆	22	Indoor unit capacity error
●(2)	●(3)	◆	23	Combination error
●(2)	●(4)	◆	24	• Connection unit number error (indoor secondary unit) [Simultaneous Multi] • Connection unit number error (indoor unit or branch unit) [Flexible Multi]
●(2)	●(6)	◆	26	Indoor unit address setting error
●(2)	●(7)	◆	27	Primary unit, secondary unit set-up error [Simultaneous Multi]
●(2)	●(9)	◆	29	Connection unit number error in wired remote controller system
●(3)	●(1)	◆	31	Power supply interruption error
●(3)	●(2)	◆	32	Indoor unit PCB model information error
●(3)	●(3)	◆	33	Indoor unit motor electricity consumption detection error
●(3)	●(5)	◆	35	Manual auto switch error
●(3)	●(9)	◆	39	Indoor unit power supply error for fan motor
●(3)	●(10)	◆	3A	Indoor unit communication circuit (wired remote controller) error
●(4)	●(1)	◆	41	Room temp. sensor error
●(4)	●(2)	◆	42	Indoor unit Heat Ex. Middle temp. sensor error
●(4)	●(4)	◆	44	Human sensor error
●(5)	●(1)	◆	51	Indoor unit fan motor error
●(5)	●(3)	◆	53	Drain pump error
●(5)	●(4)	◆	54	Electric air cleaner reverse VDD error
●(5)	●(5)	◆	55	Filter set error
●(5)	●(7)	◆	57	Damper error
●(5)	●(8)	◆	58	Intake grille error
●(5)	●(9)	◆	59	Indoor unit fan motor 2 error (Left side fan)
●(5)	●(10)	◆	5A	Indoor unit fan motor 3 error (Right side fan)
●(5)	●(15)	◆	5U	Indoor unit error

Error display			Wired remote controller Error code	Description
OPERATION lamp (green)	TIMER lamp (orange)	ECONOMY lamp (green)		
●(6)	●(1)	◆	61	Outdoor unit reverse/missing phase and wiring error
●(6)	●(2)	◆	62	Outdoor unit main PCB model information error or communication error
●(6)	●(3)	◆	63	Inverter error
●(6)	●(4)	◆	64	Active filter error, PFC circuit error
●(6)	●(5)	◆	65	Trip terminal L error
●(6)	●(8)	◆	68	Outdoor unit rush current limiting resister temp. rise error
●(6)	●(10)	◆	6A	Display PCB microcomputers communication error
●(7)	●(1)	◆	71	Discharge temp. sensor error
●(7)	●(2)	◆	72	Compressor temp. sensor error
●(7)	●(3)	◆	73	Outdoor unit Heat Ex. liquid temp. sensor error
●(7)	●(4)	◆	74	Outdoor temp. sensor error
●(7)	●(5)	◆	75	Suction Gas temp. sensor error
●(7)	●(6)	◆	76	• 2-way valve temp. sensor error • 3-way valve temp. sensor error
●(7)	●(7)	◆	77	Heat sink temp. sensor error
●(8)	●(2)	◆	82	• Sub-cool Heat Ex. gas inlet temp. sensor error • Sub-cool Heat Ex. gas outlet temp. sensor error
●(8)	●(3)	◆	83	Liquid pipe temp. sensor error
●(8)	●(4)	◆	84	Current sensor error
●(8)	●(6)	◆	86	• Discharge pressure sensor error • Suction pressure sensor error • High pressure switch error
●(9)	●(4)	◆	94	Trip detection
●(9)	●(5)	◆	95	Compressor rotor position detection error
●(9)	●(7)	◆	97	Outdoor unit fan motor error
●(9)	●(8)	◆	98	Outdoor unit fan motor 2 error
●(9)	●(9)	◆	99	4-way valve error
●(9)	●(10)	◆	9A	Coil (expansion valve) error
●(10)	●(1)	◆	A1	Discharge temp. error
●(10)	●(3)	◆	A3	Compressor temp. error
●(10)	●(4)	◆	A4	High pressure error
●(10)	●(5)	◆	A5	Low pressure error
●(13)	●(2)	◆	J2	Branch boxes error [Flexible Multi]

Display mode ● : 0.5s ON / 0.5s OFF
◆ : 0.1s ON / 0.1s OFF
( ) : Number of flashing

PARTS

INDOOR UNIT
ASYS09KMCB
ASYG12KMCB
ASYG14KMCB

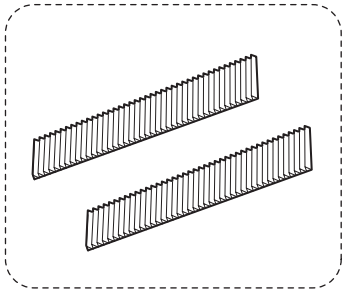

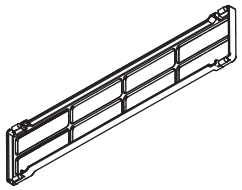

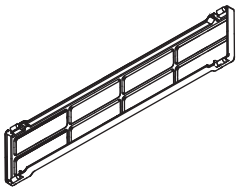

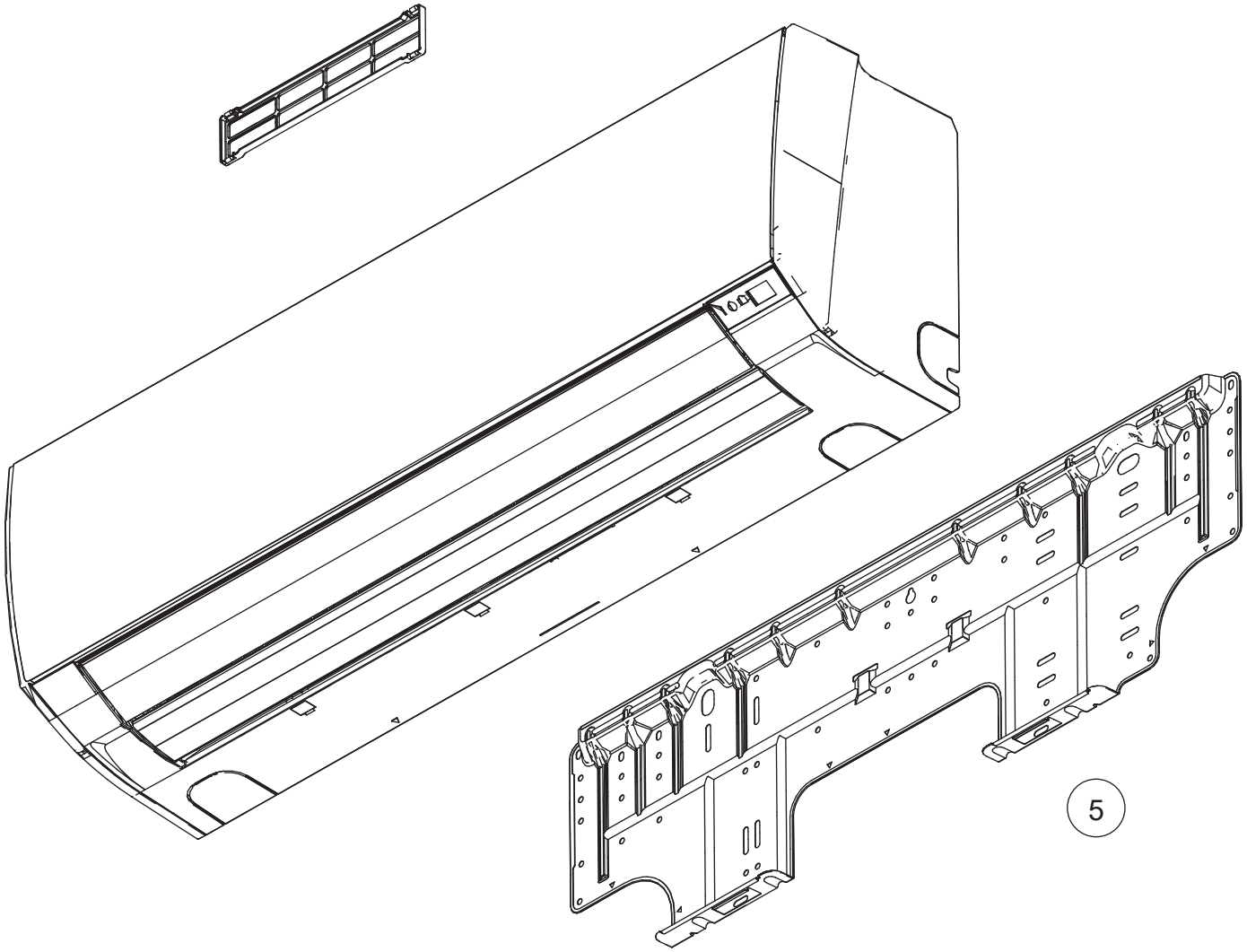

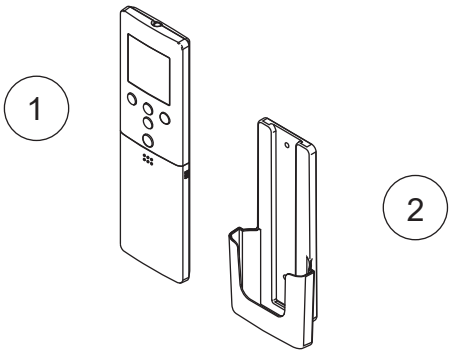

Ref.	Description	Part number
1	Remote control (no brand)	9319208008
2	Remote control holder	9318912005
3	Air clean filter assy	9317250009
4	Electric filter holder	9332911008
5	Bracket panel	9332882018

INDOOR UNIT
ASYG09KMCB
ASYG12KMCB
ASYG14KMCB

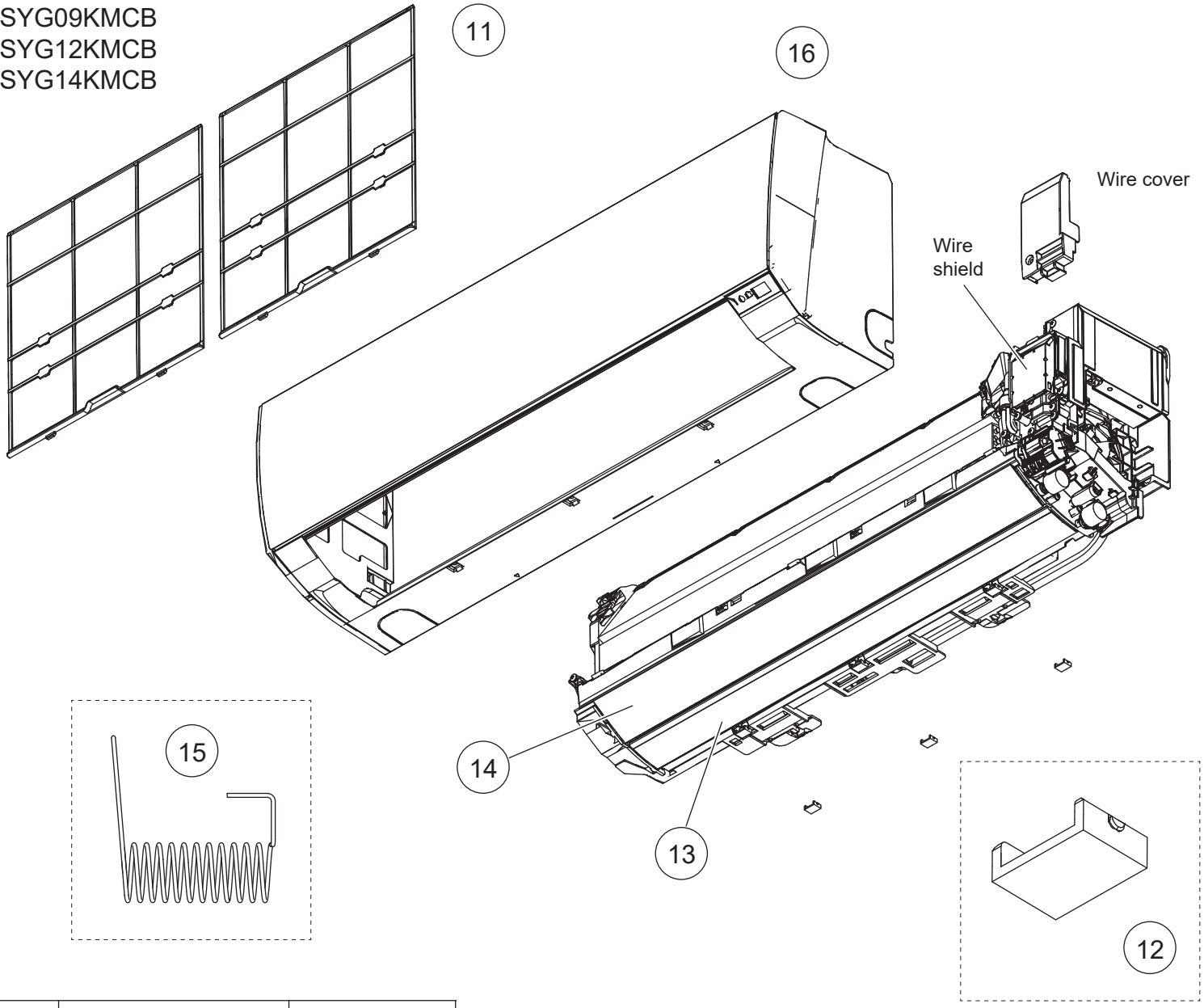

Ref.	Description	Part number
11	Air filter	9332875010
12	Screw cap	9309002081
13	Diffuser assy	9332998009
14	Louver	9333353005
15	Spring (louver)	9332999006
16	Front panel sub assy (FUJITSU)	9332994209
17	Front panel C	9332895001
18	Front panel L	9332896008
19	Front panel R	9332897005
20	Intake grille assy (no brand)	9332996005

Front panel sub assy

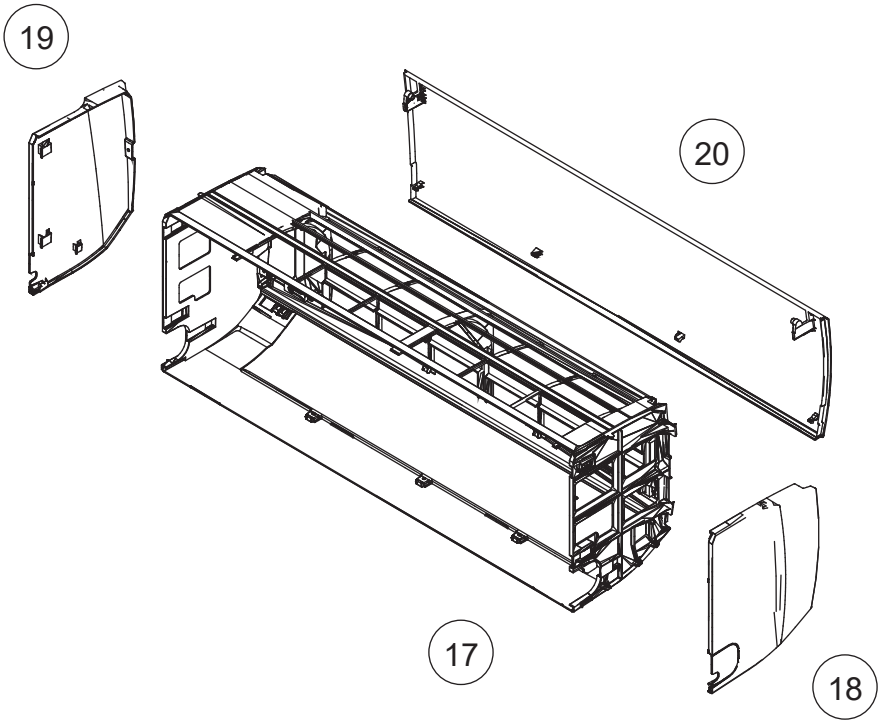

INDOOR UNIT
ASYG09KMCB
ASYG12KMCB
ASYG14KMCB
Control box

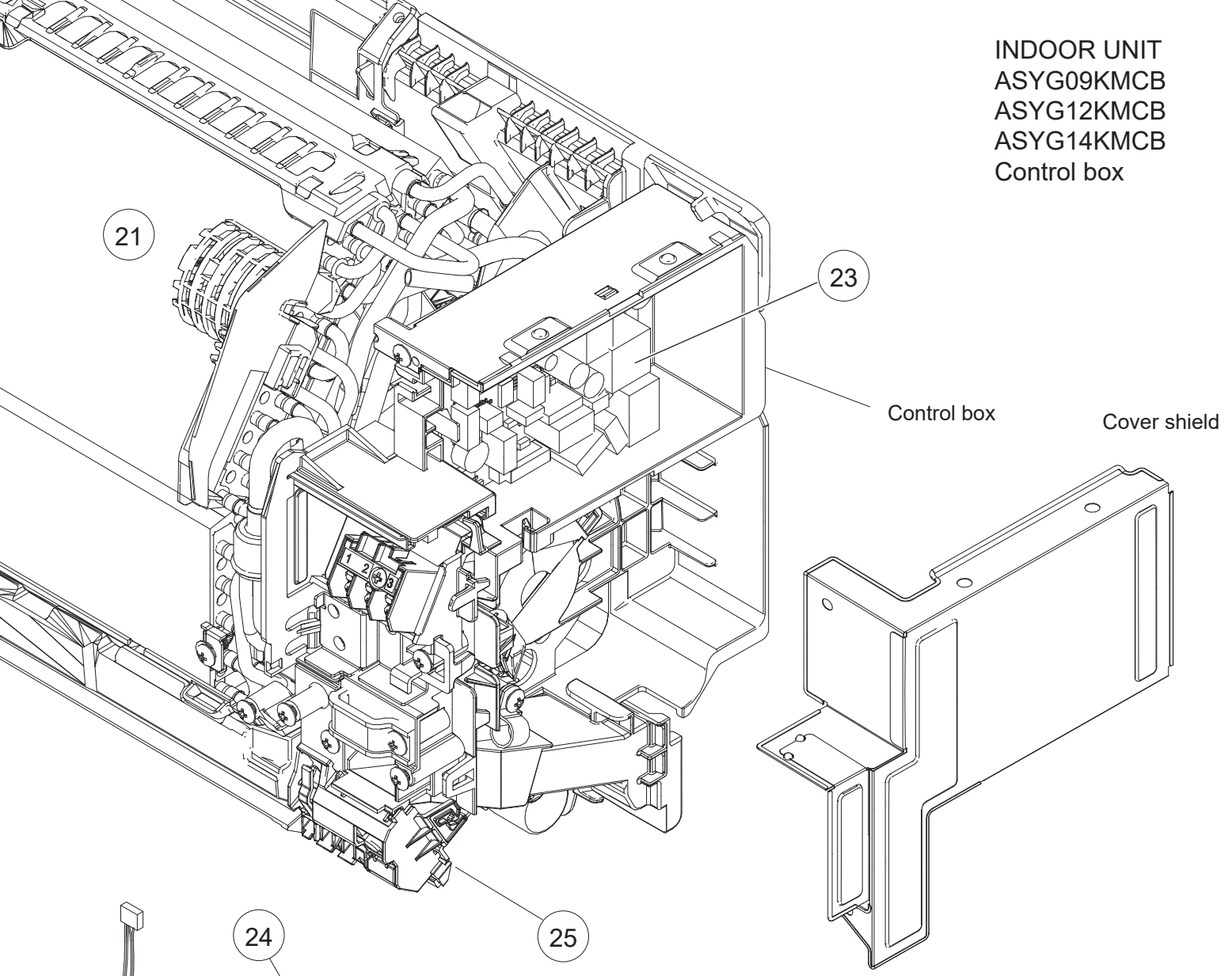

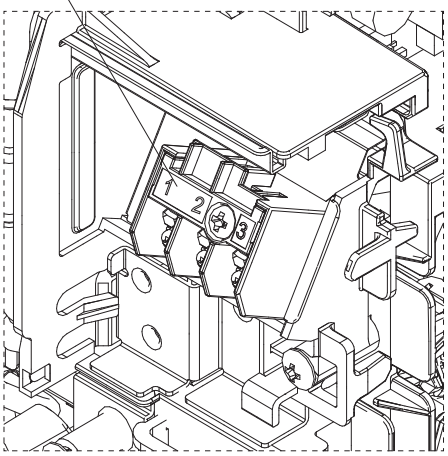

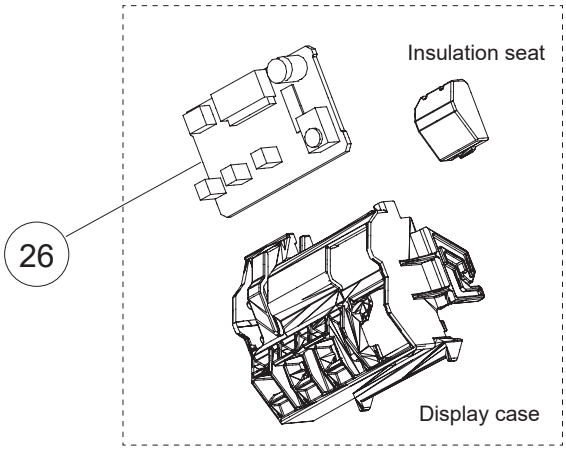

Ref.	Description	Part number
21	Room thermistor holder	9332868005
22	Thermistor assy	9900627010
23	Main PCB - ASYG09KMCB	9709427590
23	Main PCB - ASYG12KMCB	9709427606
23	Main PCB - ASYG14KMCB	9709427613
24	Terminal	9900720001
25	Display assy	9709430057
26	Indicator PCB	9709431016

IDOOR UNIT
ASYG09KMCB
ASYG12KMCB
ASYG14KMCB
Evaporator
Fan

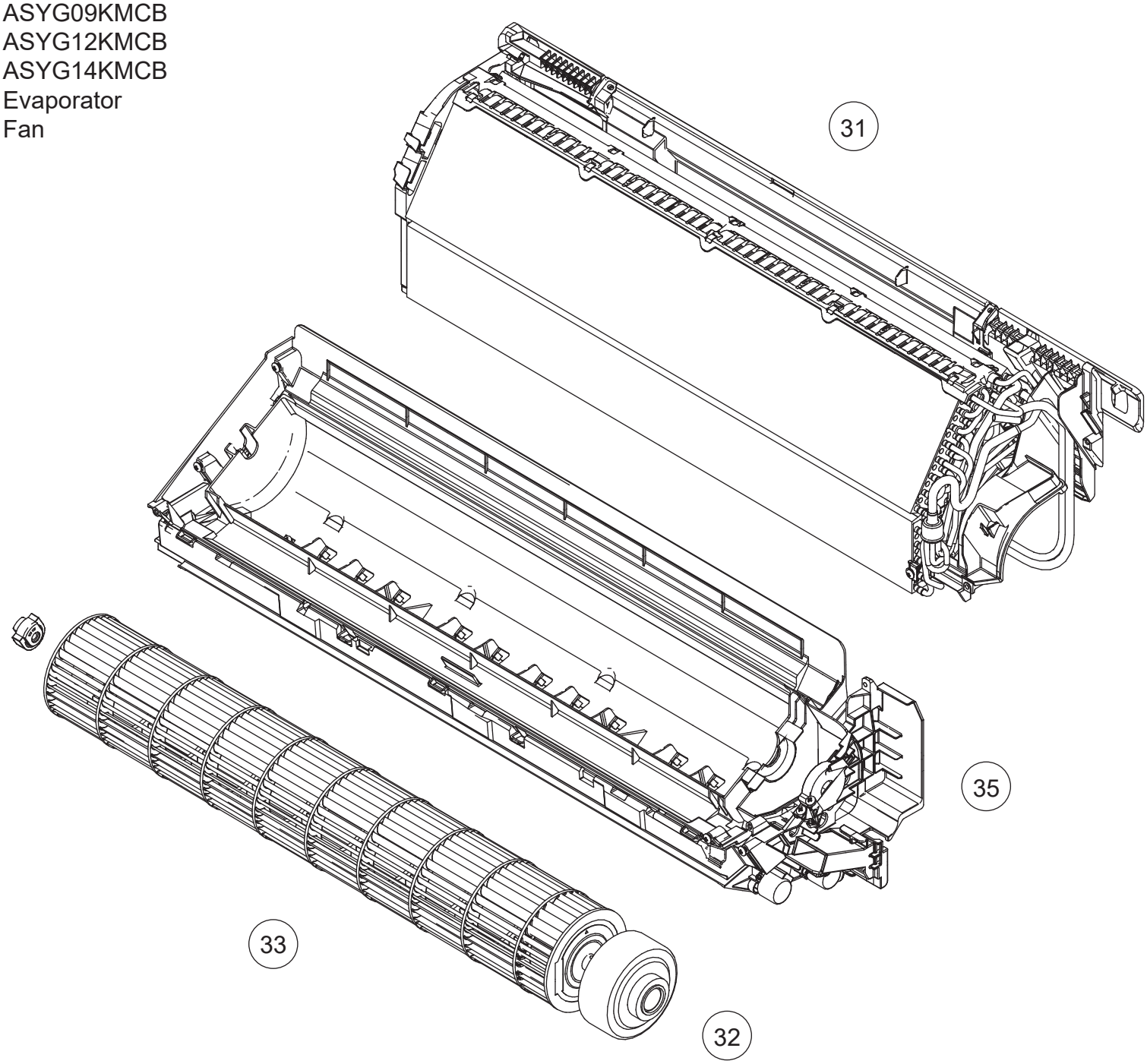

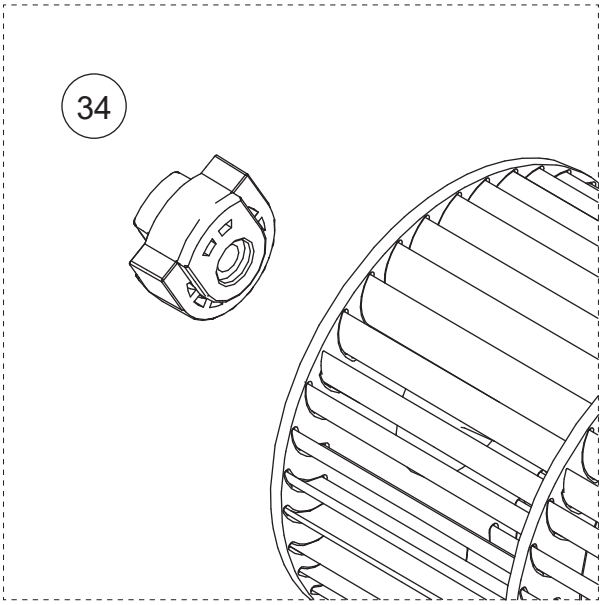

Ref.	Description	Part number
31	Evaporator total assy	9332989328
32	Fan motor	9603342005
33	Crossflow fan assy	9316830004
34	Bearing C assy	9306628017
35	Casing assy	9333009100

INDOOR UNIT
ASYG09KMCB
ASYG12KMCB
ASYG14KMCB
Casing assy

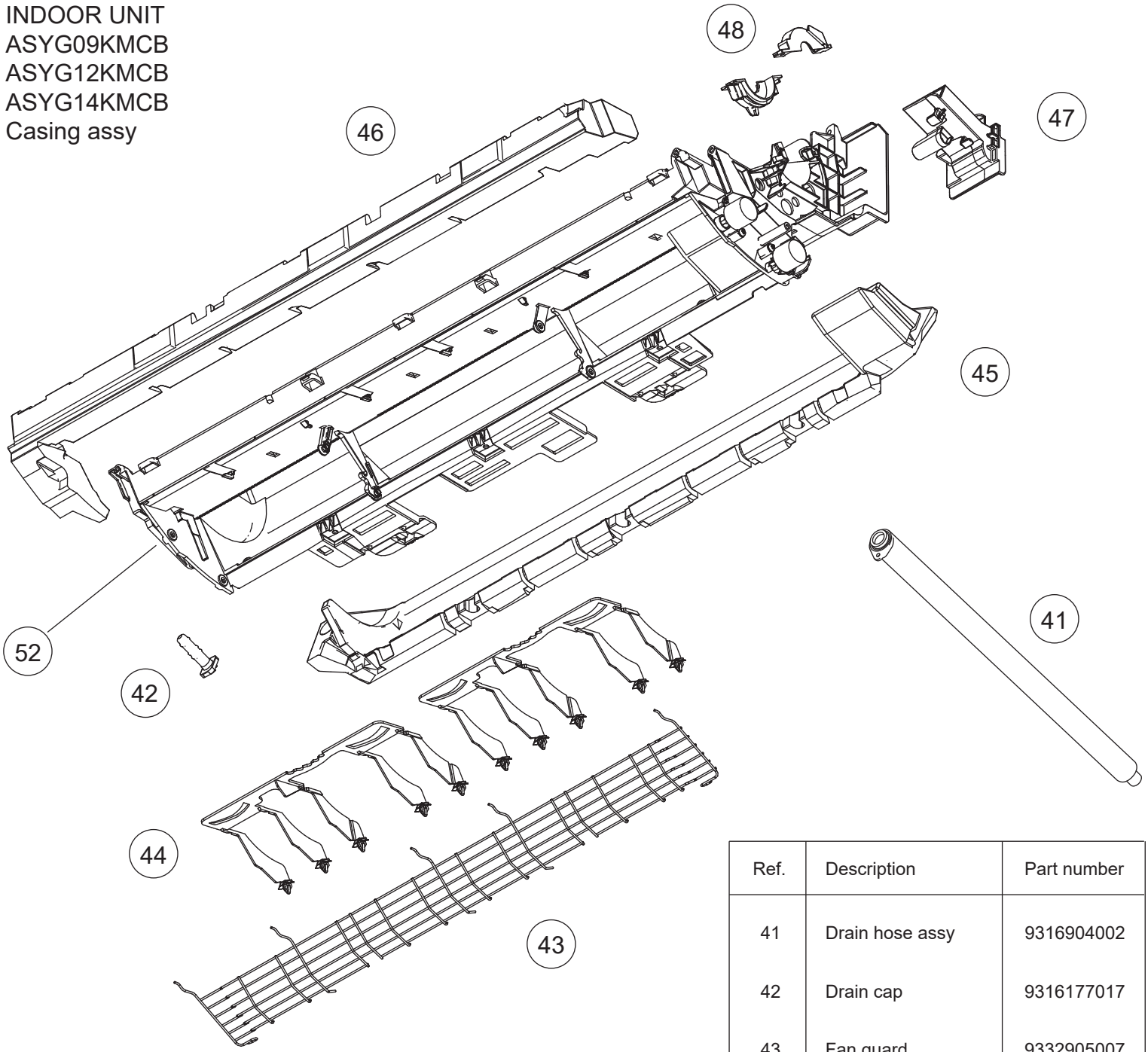

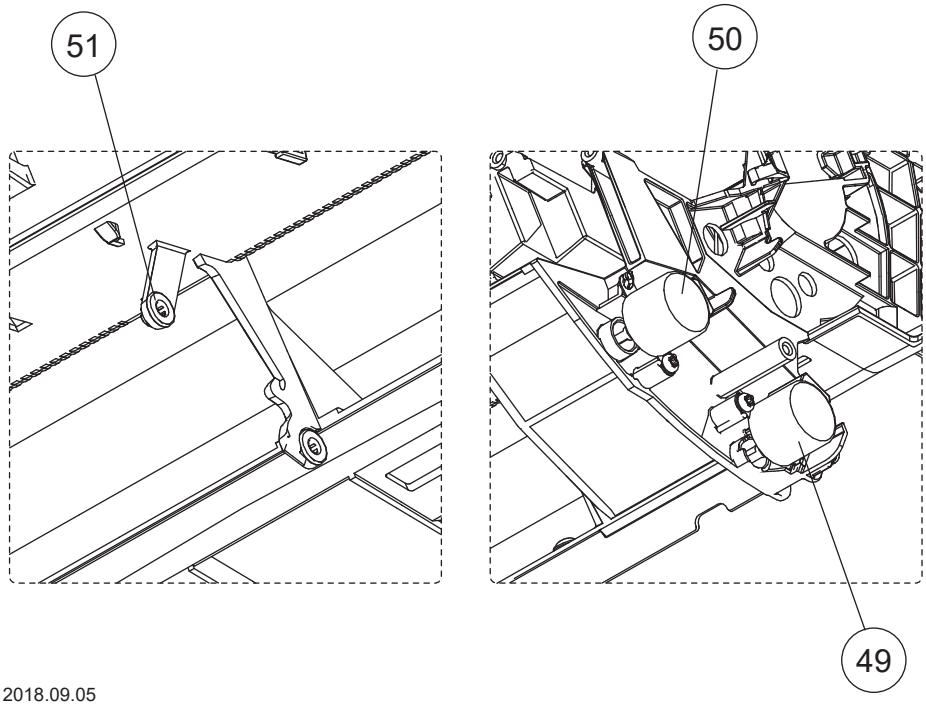

Ref.	Description	Part number
41	Drain hose assy	9316904002
42	Drain cap	9316177017
43	Fan guard	9332905007
44	R and L louver A	9332891003
45	Casing cover B	9332908008
46	Casing cover F	9332909005
47	Cable guide	9332903003
48	Motor holder L/R	9332859003
49	Step motor (diffuser)	9900790103
50	Step motor (louver)	9900790028
51	Bush	9318745016
52	Casing	9332890006

PARTS

OUTDOOR UNIT
AOYG09KMCBN
AOYG12KMCBN
AOYG14KMCBN

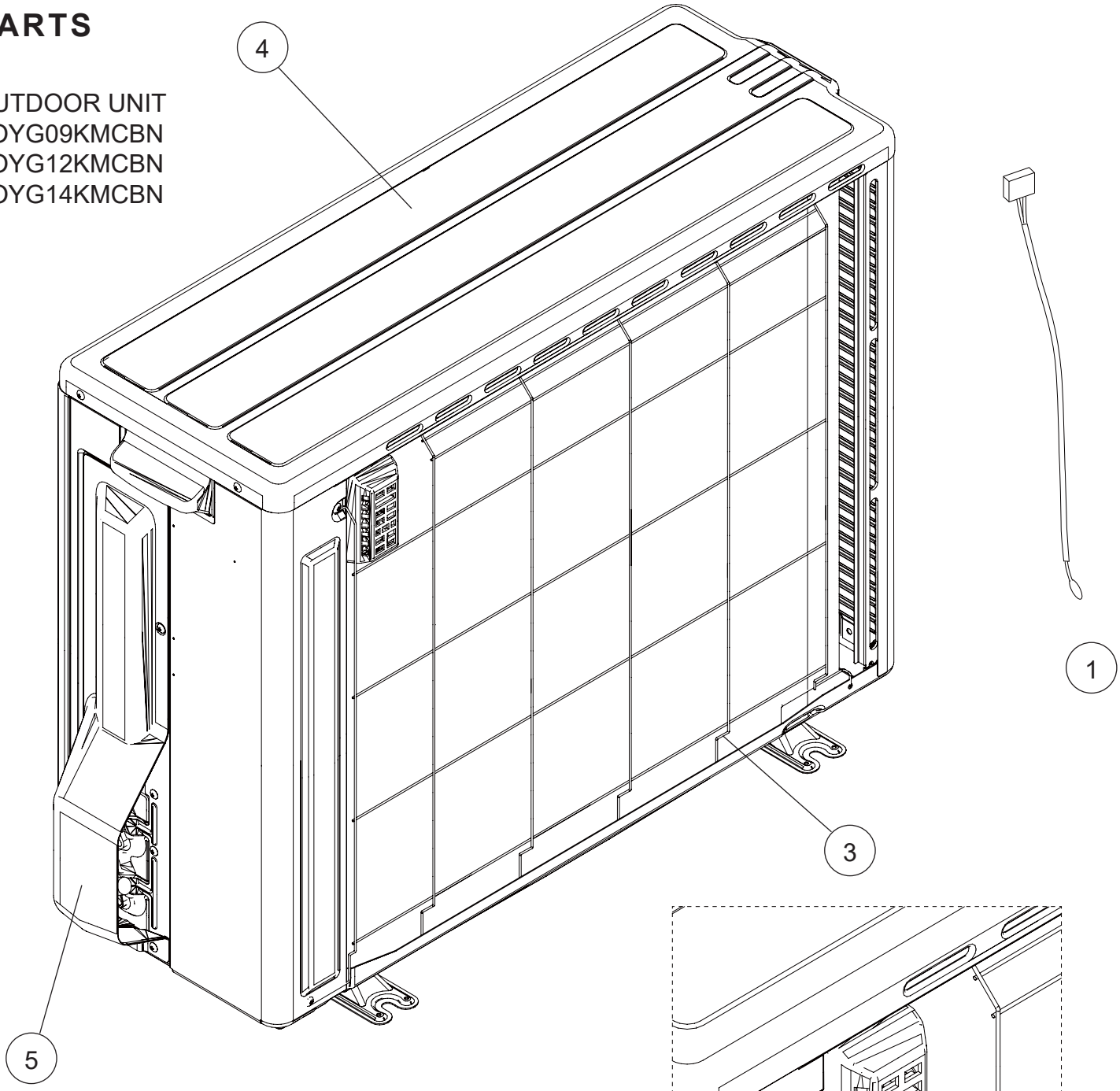

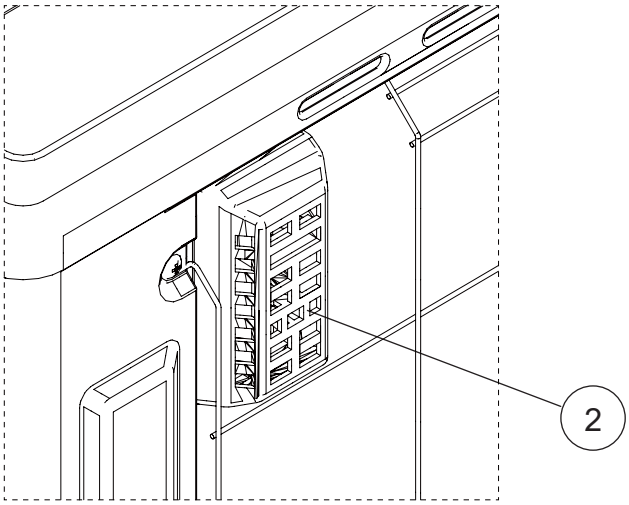

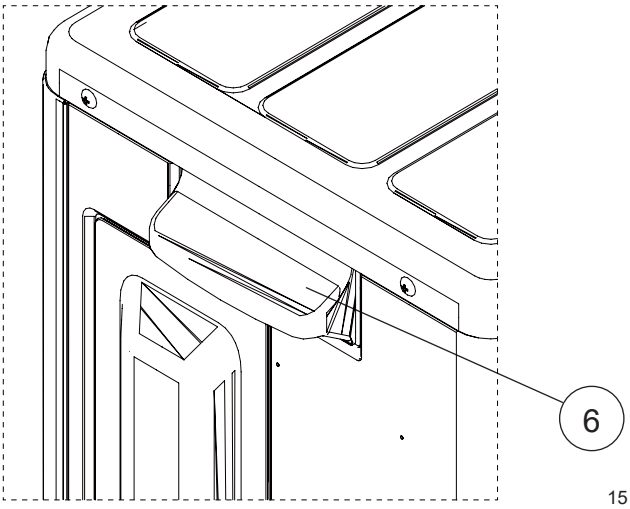

Ref.	Description	Part number
1	Outdoor thermistor	9900565008
2	Thermistor holder	9313954031
3	Protective net	9332492002
4	Top panel assy	9317939188
5	Switch cover assy	9318499001
6	Grip	9317588003

OUTDOOR UNIT
AOYG09KMCBN
AOYG12KMCBN
AOYG14KMCBN

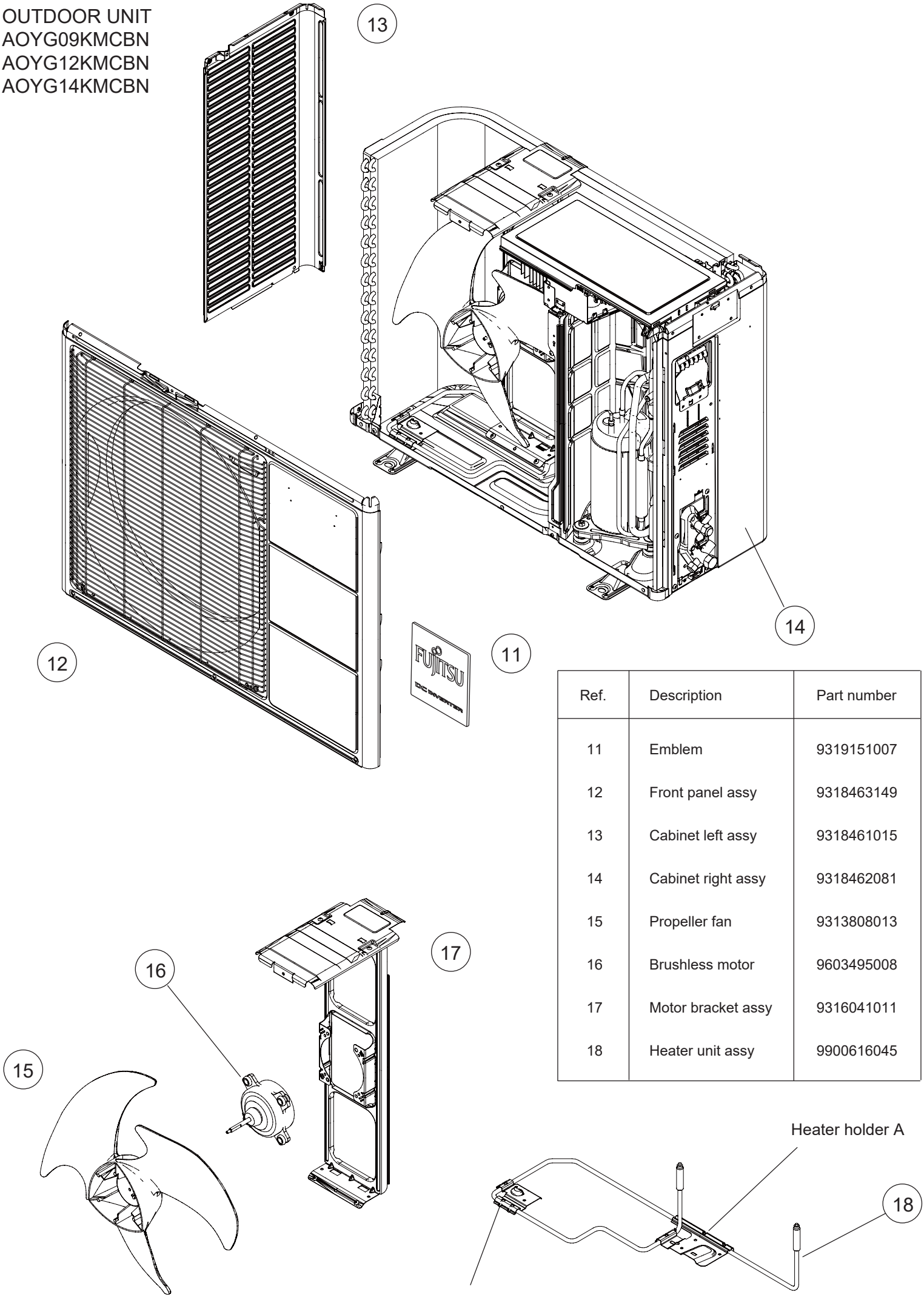

Ref.	Description	Part number
11	Emblem	9319151007
12	Front panel assy	9318463149
13	Cabinet left assy	9318461015
14	Cabinet right assy	9318462081
15	Propeller fan	9313808013
16	Brushless motor	9603495008
17	Motor bracket assy	9316041011
18	Heater unit assy	9900616045

OUTDOOR UNIT
AOYG09KMCBN
AOYG12KMCBN
AOYG14KMCBN

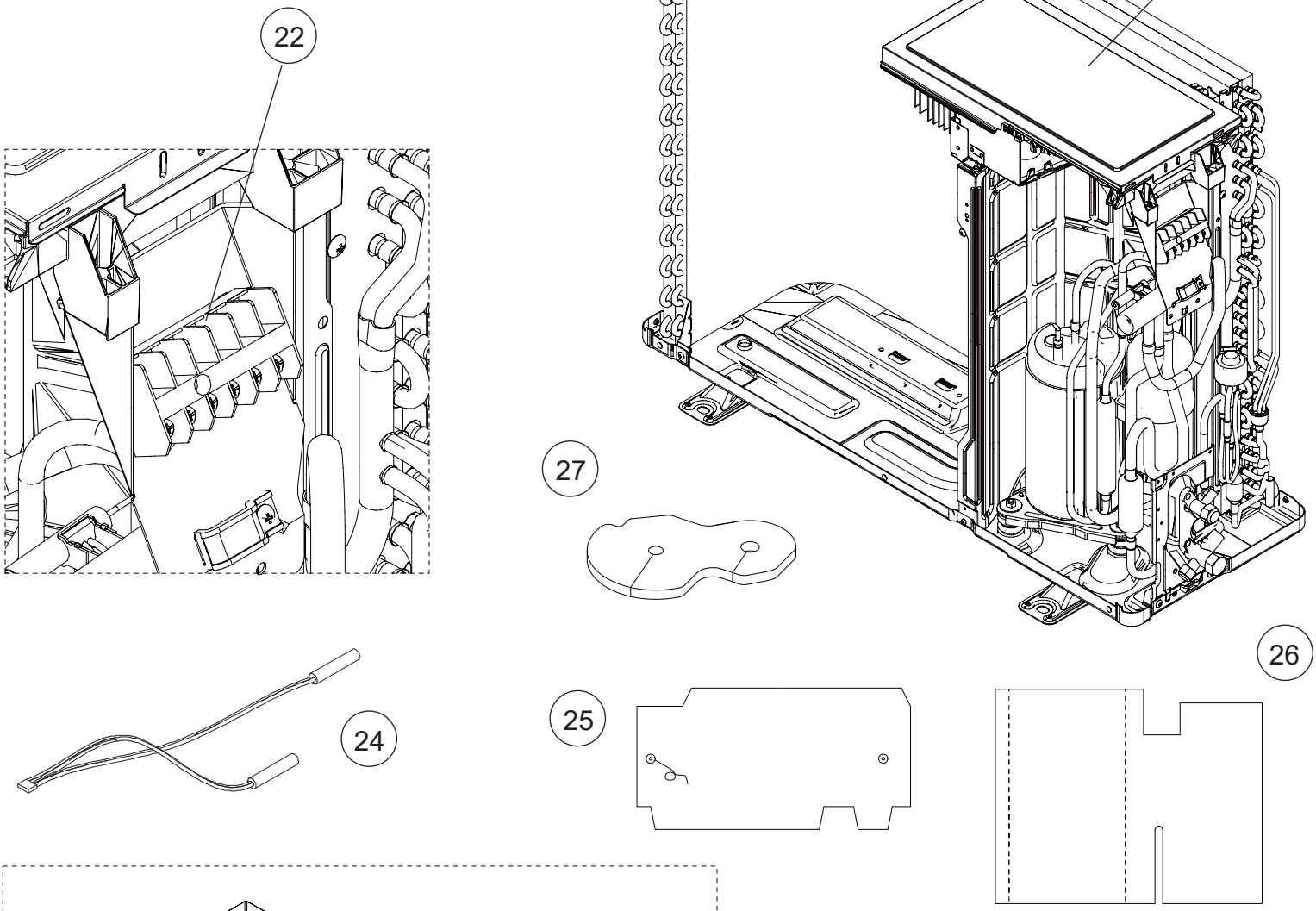

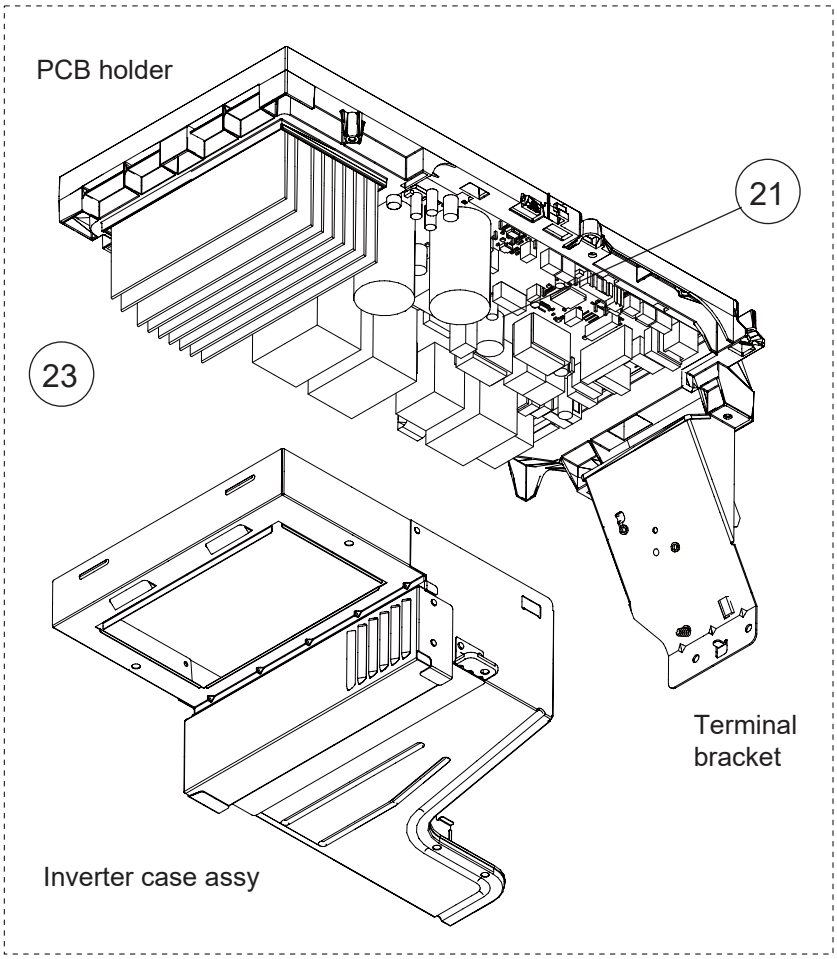

Ref.	Description	Part number
21	Main PCB (service unit) (AOYG09KMCBN)	9709682654
21	Main PCB (service unit) (AOYG12KMCBN)	9709682661
21	Main PCB (service unit) (AOYG14KMCBN)	9709682678
22	Terminal	9900380007
23	Heatsink	9319540030
24	Thermistor assy	9900935016
25	Noise insulator A	9319731025
26	Noise insulator F	9322211002
27	S-insulator H	9313371012

OUTDOOR UNIT
AOYG09KMCBN
AOYG12KMCBN
AOYG14KMCBN

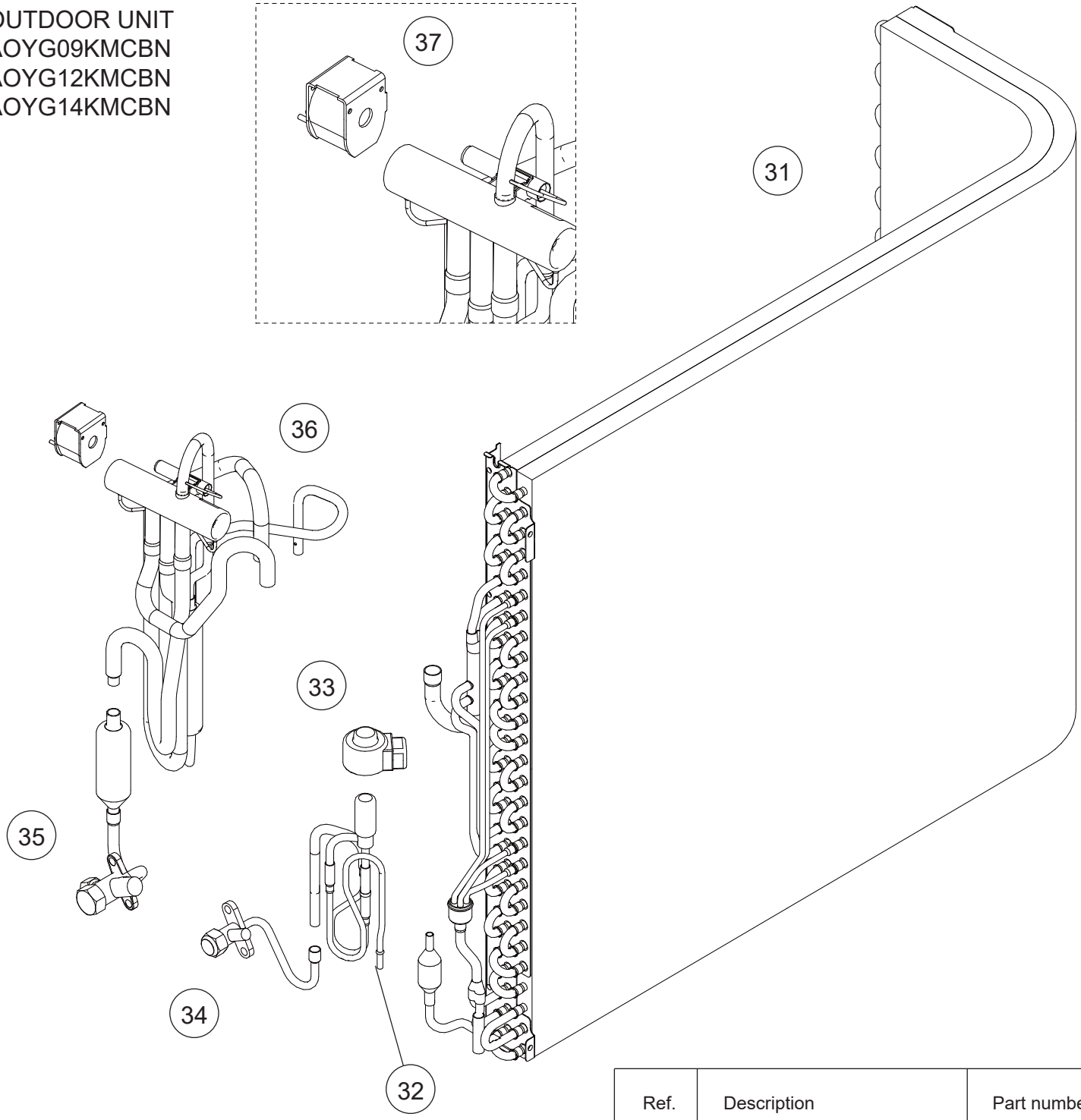

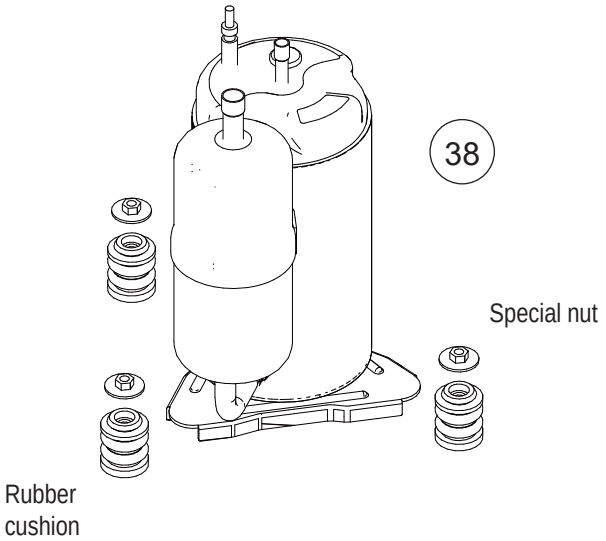

Ref.	Description	Part number
31	Condenser total assy	9317089609
32	Pulse motor valve sub assy	9320152093
33	Expansion valve coil	9970095078
34	2-way valve assy	9318252026
35	3-way valve sub assy	9320411008
36	4-way valve assy	9300198004
37	Solenoid	9970195006
38	Compressor assy	9322065001

ACCESSSORIES

INDOOR UNIT
ASYG09KMCB
ASYG12KMCB
ASYG14KMCB

Part name	Exterior	Q'ty	Part name	Exterior	Q'ty
Operating manual		1	Cloth tape		1
Operating manual (CD-ROM)	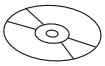	1	Wall hook bracket	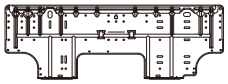	1
Installation manual		1	Tapping screw (large)		5
Remote controller	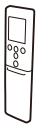	1	Tapping screw (small)		2
Battery		2	Air cleaning filter	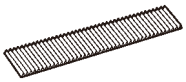	2
Remote controller holder		1	Filter holder	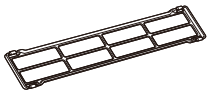	2

OUTDOOR UNIT
AOYG09KMCBN
AOYG12KMCBN
AOYG14KMCBN

Part name	Exterior	Q'ty	Part name	Exterior	Q'ty
Installation manual		1			

1808G4740